■ GROUND FAULT/LEAKAGE DETECTOR

2620

with the Artifical Neutral AN-1

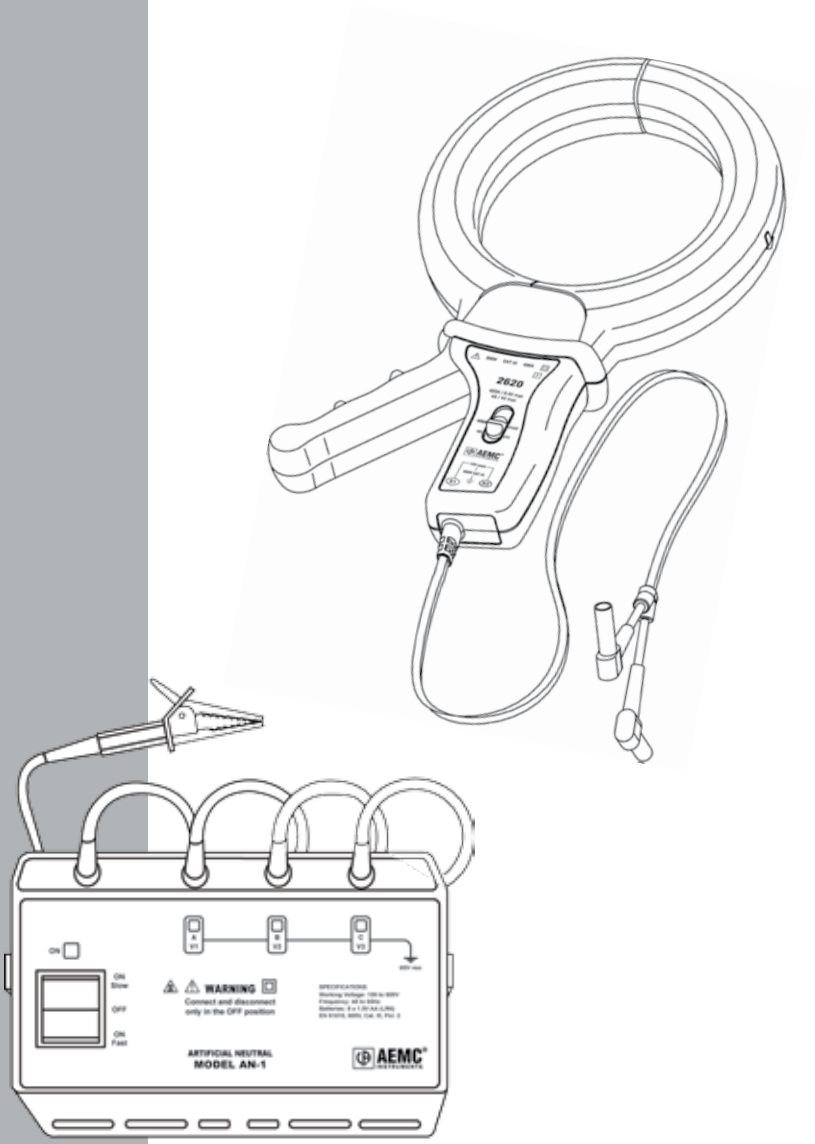

ENGLISH

User Manual

AEMC® INSTRUMENTS

Statement of Compliance

Chauvin Arnoux®, Inc. d.b.a. AEMC® Instruments certifies that this instrument has been calibrated using standards and instruments traceable to international standards.

We guarantee that at the time of shipping your instrument has met its published specifications.

An NIST traceable certificate may be requested at the time of purchase, or obtained by returning the instrument to our repair and calibration facility, for a nominal charge.

The recommended calibration interval for this instrument is 12 months and begins on the date of receipt by the customer. For recalibration, please use our calibration services. Refer to our repair and calibration section at **www.aemc.com**.

Serial #: _____

Catalog #: 2125.52

Model #: 2620

Please fill in the appropriate date as indicated:

Date Received: _____

Date Calibration Due: _____

AEMC® INSTRUMENTS

Chauvin Arnoux®, Inc.
d.b.a AEMC® Instruments
www.aemc.com

Table of Contents

1. INTRODUCTION 3

1.1 International Electrical Symbols 3

1.2 Definition of Measurement Categories 4

1.3 Receiving Your Shipment 4

1.4 Ordering Information 4

1.4.1 Accessories and Replacement Parts 4

2. PRODUCT FEATURES 5

2.1 Description 5

2.2 Connections 6

3. SPECIFICATIONS 7

3.1 Reference Conditions 7

3.2 Electrical 7

3.3 Mechanical 8

3.4 Environmental 9

3.5 Safety 9

4. OPERATION 10

4.1 Principle of Operation 10

4.1.1 Measuring Current Leakage 10

4.1.2 Interpreting the Measurement 10

4.2 Equipment Troubleshooting 11

4.3 Testing Various Cable Configurations 12

4.3.1 Metal Conduits 12

4.3.2 Grounded Neutral 14

4.3.3 Neutral Grounded Through an Impedance 15

4.3.4 Ungrounded System 15

4.4 Commonly Asked Questions 15

5. ARTIFICIAL NEUTRAL 17

Warning 17

5.1 Description 17

5.2 Specifications....19
5.2.1 Electrical....19
5.2.2 Mechanical....19
5.2.3 Safety....19
5.3 Principle of Operation....20
5.4 Testing Ungrounded Systems....21

6. MAINTENANCE 22
6.1 Cleaning....22

Repair and Calibration....23

Technical and Sales Assistance....23

Limited Warranty....24

Warranty Repairs....24

INTRODUCTION

Warning

These safety warnings are provided to ensure the safety of personnel and proper operation of the instrument.

- Never use this clamp on conductors with a voltage potential above 600Vrms.
- Never clamp around a conductor unless the clamp is terminated to a measuring instrument with proper input impedance.
- Keep the jaw mating surfaces clean. If necessary, use a slightly oiled cloth to remove oxidation.
- Ensure that the cables or bus bar are properly centered within the clamp jaws.
- Stay away from other conductors which may create interference.
- Avoid leaving the clamp in damp places or exposing it to running water.
- Due to shock or fire hazards, electrical connections of the instrument should be performed only by qualified personnel and in accordance with local, state, and federal electrical requirements.

1.1 International Electrical Symbols

This symbol signifies that the instrument is protected by double or reinforced insulation. Use only specified replacement parts when servicing the instrument.

This symbol on the instrument indicates a WARNING and that the operator must refer to the user manual for instructions before operating the instrument. In this manual, the symbol preceding instructions indicates that if the instructions are not followed, bodily injury, installation/sample and product damage may result.

Risk of electric shock. The voltage at the parts marked with this symbol may be dangerous.

1.2 Definition of Measurement Categories

CAT I: For measurements on circuits not directly connected to the AC supply wall outlet such as protected secondaries, signal level, and limited energy circuits.

CAT II: For measurements performed on circuits directly connected to the electrical distribution system. Examples are measurements on household appliances or portable tools.

CAT III: For measurements performed in the building installation at the distribution level such as on hardwired equipment in fixed installation and circuit breakers.

CAT IV: For measurements performed at the primary electrical supply (<1000V) such as on primary overcurrent protection devices, ripple control units, or meters.

1.3 Receiving Your Shipment

Upon receiving your shipment, make sure that the contents are consistent with the packing list. Notify your distributor of any missing items. If the equipment appears to be damaged, file a claim immediately with the carrier and notify your distributor at once, giving a detailed description of any damage. Save the damaged packing container to substantiate your claim.

1.4 Ordering Information

Ground Fault/Leakage Detector Model 2620..... **Cat. #2125.52**
Includes user manual and warranty card.

1.4.1 Accessories and Replacement Parts

Adapter – 4mm Non-insulated for Safety Leads ..... **Cat. #1017.45**
(Converts male safety plugs to non-shielded male plugs)

Artificial Neutral Model AN-1..... **Cat. #1971.01**
Includes instrument with soft carrying case; eight 1.5 V "AA" batteries; four 5 ft (1.5 m) color-coded leads (green, red, black, blue) and user manual.

Bag – Large Classic Tool Bag ..... **Cat. #2133.71**

Bag – Small Classic Tool Bag ..... **Cat. #2133.72**

Lead – Replacement ..... **Cat. #2950.29**
Set of 4 Color-coded 5 ft Safety Leads (4mm straight banana plugs on both ends) for use with the Artificial Neutral Model AN-1.Rated 600V CAT IV

PRODUCT FEATURES

2.1 Description

The Model 2620 measures leakage current shunted to ground caused by insulation breakdown or leaks. It enables the operator to locate failures when or before they occur, without shutting down equipment or spending hours trouble-shooting.

It is designed specifically for locating low current faults on high current loads. The detector is a sensitive AC current transformer capable of measuring differential or leakage current from 500µA, and may be used to measure current up to 400A continuous duty.

The Model 2620 provides, on two ranges, 1mV/mAAC or 1mV/AAC. The output leads are terminated with standard 4mm banana plugs capable of interfacing with any standard multimeter.

Use of a digital multimeter with analog bar graph is recommended:
Digital to provide the proper voltage input impedance, and an analog bar graph to track trends.

When the 2620 is used as a current leakage detector, it makes no difference if the system is single-phase or poly-phase, or if the currents are in-phase or out of phase, balanced or unbalanced.

The net magnetic field at any instant in time will be zero if all the conductors surrounded by the current leakage detector are supplying all the current delivered to and received from the load.

If any current is diverted through any alternate path to ground, such as an insulation breakdown, the net loss will be detected producing a output proportional to the amplitude of the fault current.

The Model 2620 may also be used simply as a highly accurate clamp-on current probe. With its 4" jaw opening and range of 500µA to 400A, the 2620 provides a versatile way to analyze unbalanced current measurements, leakage values on grounding conductors and ground loop currents.

2.2 Connections

The Model 2620 is compatible with most DMMs, voltmeters, or other voltage measuring instruments with the following features:

- Range and resolution capable of displaying 1mVAC of input.
- Voltmeter accuracy of 0.75% or better to take full advantage of the accuracy of the probe.
- Minimum input impedance of 1MΩ.

Connect the probe to the multimeter or other instrument.

Select the appropriate AC voltage range on your multimeter.

The Model 2620 has two selectable output ranges. The 4A range will produce a mV/mA with an output of 4VAC at 4A. The 400A range produces 1mV/A with 400mVAC at 400A.

⚠ Warning: User Safety

Always use a DMM, voltmeter or other displaying device, appropriately rated for the working voltage and for safety.

SPECIFICATIONS

3.1 Reference Conditions

Ambient temperature:	23°C ± 3K
Relative humidity:	20 to 75% RH
Position of the conductor:	Centered in the jaws
Current frequency and form:	Sinusoidal 50/60Hz ± 0.2Hz, distortion <1%
Superimposed DC current:	No DC current
Continuous magnetic field:	Earth field < 40 A/m
Alternating magnetic field:	No external alternating magnetic field
Proximity of external conductors:	None
Measuring device's impedance:	≥ 10MΩ / 100pF

3.2 Electrical

4A Range

Nominal Current: 4AAC

Measurement Range: 0.5mA to 4AAC

Output Signal: 1mVAC/mAAC

4A Range	0.5 to 10mA	10 to 100mA	100mA to 4A
Accuracy	3% of R ± 1mV	0.5% of R ± 0.5mV	0.5% of R ± 0.5mV
Phase Shift	–	< 15°	< 10°

400A Range

Nominal Current: 400AAC

Measurement Range: 0.5A to 400AAC

Output Signal: 1mVAC/AAC

400A Range	0.5 to 10A	10 to 100A	100 to 400A
Accuracy	0.5% of R ± 0.5mV	0.35% of R ± 0.5mV	0.35% of R ± 1mV
Phase Shift	–	< 1°	< 0.6°

Overloads

- Ip limit current: permanent 400 AC RMS
- Peak current: < 1000A
- Permissible transient di/dt: ≤30A/µs
- Conductor temperature: ≤ 70°C with a maximum peak of 90°C

Load Impedance (DMM): 1MΩ min

Frequency: 48 to 1000Hz

Errors caused by external influences:

Ambient temperature	< 0.1% per 10K
Position of the gripped conductor (max with not centred conductor)	0.1% typic of VOUT (non-differential current); 0.2% max
Residual differential (max with not centred conductor)	0.1% typic of IP (differential current); 0.2% max
External fields, 1V/A (1)	< 60mV of Vs
External fields, 1mV/mA (1)	< 100µV of Vs
Coupled DC current, 1V/A (2)	< 1mV for continuous 1A
Coupled DC current, 1mVm/A (2)	< 0.1mV for continuous 1A
Frequency, 1V/A (3)	< 1.5% from 30Hz to 1KHz
Frequency, 1mV/mA (3)	< 0.5% from 30Hz to 1KHz

(1): 400 A/m 50Hz field perpendicular to the clamp opening
(2): DC current coupled onto an AC current
(3): Limited to 1KHz for 100A

3.3 Mechanical

Dimensions: 11.2 x 6.9 x 1.8" (285 x 175 x 45mm)

Weight: 2.9 lbs (1300g) approx

Jaw opening: 4.4" (112mm)

Maximum Jaw Gap: 9.8" (250mm)

Maximum Clamping Capacity: Max 4.5" (115mm) Ø cable

3.4 Environmental

Operating Temperature:
-14° to 131°F (-10° to 55°C); 0 to 85% RH (non-condensing)

Storage Temperature:
-40° to 158°F (-40° to 70°C); 0 to 85% RH (non-condensing)

Operating Altitude: ≤2000m on uninsulated conductors

Transport Altitude: ≤12000m

3.5 Safety

Electrical Safety

CE ⧈

EN 61010, 600V CAT III
Pollution Degree: 2

Electromagnetc Compatibility

Industrial Environment: Criterion B
Emissivity (EN 61326-1)
Susceptibility (EN 61326-1)

Self-extinguishing Capability

Jaws and Casing: VO (UL 94)

OPERATION

4.1 Principle of Operation

4.1.1 Measuring Current Leakage

When a generator supplies an AC load through a pair of wires in an insulated cable, the current going out on one wire is equal to the current returning; their vector sum equals zero. A ground fault changes this equality, and the leakage current detector picks it up, measures it, and provides an AC voltage output proportional to the severity of fault causing the unbalance.

The ground conductor must not pass through the detector.

4.1.2 Interpreting the Measurement

Figure 1 is a schematic of a single-phase installation of a motor and an oven, both grounded. The numbers indicate the amplitudes of the currents in different conductors. This installation has no faults. If you clamp the detector around the cables at points A,B,C or D, it will output zero.

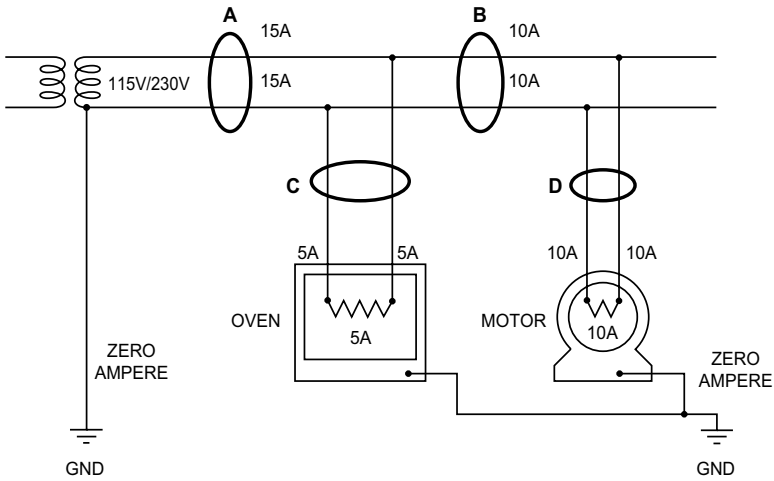

Figure 1

In Figure 2, there is a fault in the installation. At point A, the Model 2620 detects 1A (the difference between 16A and 15A), indicating a fault downstream. At point C, it detects zero; therefore, the fault is not in the oven. At points B and D, the detector picks up 1A, showing that the fault is in the motor. If it gets worse, the leakage current will increase and the circuit breaker will trip. This motor should be disconnected immediately and repaired.

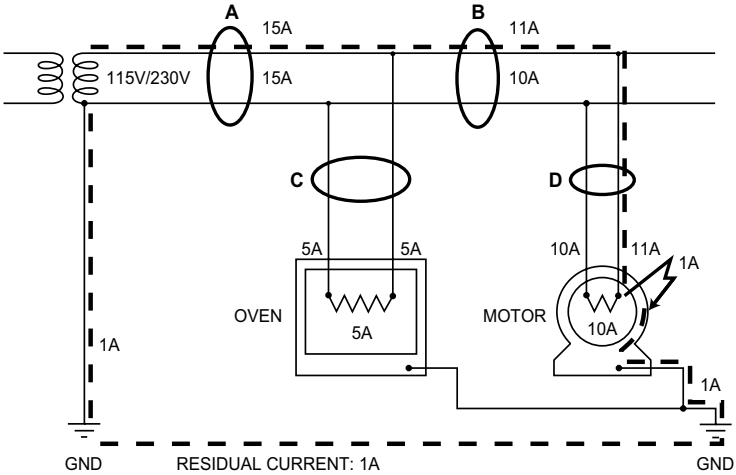

Figure 2

In a three-phase installation the principle is the same. But here it is necessary to pass all active conductors through the detector, including the neutral if one is used. If this is done properly, the detector output will be zero if there is no current leaking to ground. If it detects something other than zero, there is a ground fault that should be repaired.

4.2 Equipment Troubleshooting

To locate a fault quickly, begin your troubleshooting at the incoming low-voltage distribution header. Successively check each feeder. If the Model 2620 detects a ground fault, follow the feeder downstream, branch by branch, to the equipment with the problem.

It is useful to take measurements periodically to create a history of the quality of the insulation. This is good preventive maintenance which could prove valuable later. If you detect a fault current that is very low initially but increases from day to day, this means that electrical failure is imminent and should be taken care of during the next planned maintenance shutdown.

For best results, center the conductors within the clamp jaws. Check that the edges of the jaws are perfectly clean and that they close tightly. Try to avoid placing the conductors near the gaps, and group them as much as possible.

If you are careless, you can affect the magnitude of the reading, depending on the current being carried in the conductors. In certain cases this requires an interpretation. Normally, however, the absolute value of the ground current is not important. All you need to know is whether the reading is zero.

4.3 Testing Various Cable Configurations

Older installations have a wide variety of electrical distribution systems. Cables are clamped to walls and pass through metal conduits, and there are many cases where a shielded cable was installed during revamping of an area or addition to a building. If a cable is clamped to walls, detach it and pull it away from the surface at several points, so the clamp can surround all the conductors.

4.3.1 Metal Conduits

Cables enclosed in metal conduits which are grounded are not a problem. Simply apply the clamp around the conduit; the metal tube will not block the measurement. Cables with a metal shield can be handled in the same way as cable in metal conduit.

A grounded shield may present a problem. If it is a simple metal shield, like a thin metal wrapping, it can be considered in the same way as the metal conduit. If the armor is grounded by a conductor, it may be an inconvenience, depending on the terminal connections, as well as on the number and type of ground connections along the cable.

In Figure 3 the detector senses the fault because the shield is not connected to the motor frame and the leakage current cannot flow back through the detector.

In Figure 4, however, the instrument cannot “see” the fault because the shield is connected to the motor frame, letting the fault current return through the detector and causing it to read zero. If possible, take your measurement where you can avoid closing the shield in the clamp, such as the nearest control panel or inside the connecting box of the motor.

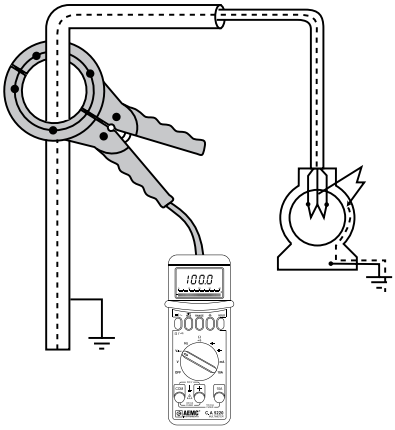

Figure 3

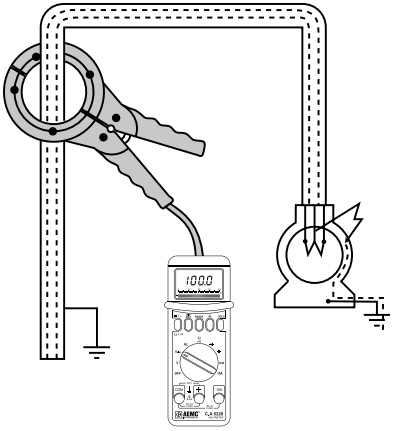

Figure 4

One way to circumvent this shielded cable problem is shown in Figures 5 and 6. Here the shield is looped through the detector twice, so that the reading will be that of the fault current.

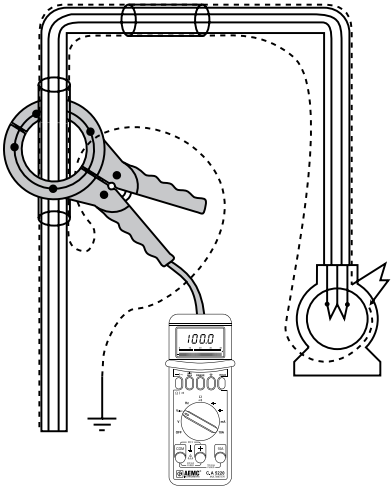

Figure 5

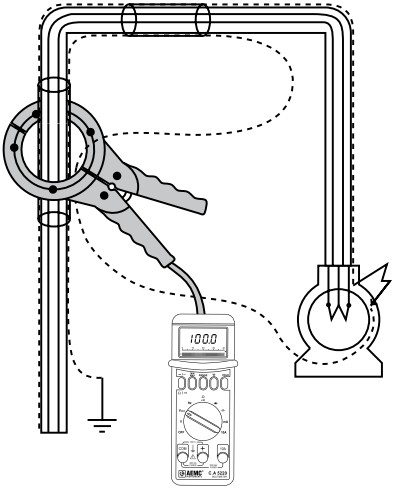

Figure 6

4.3.2 Grounded Neutral

It is easy to take measurements on this type of network, where major faults trip the circuit breaker. Here, the detector can sense minor faults, so repairs can be made before the problem gets worse. The inspection method is the same as for a single-phase installation. Remember that on a three-phase network, the currents add according to the vector sum law.

The Model 2620 measures the vector sum of the enclosed currents. If you have, for example, a 400mA fault and a 250mA fault on the same phase, the Model 2620 will detect 650mA. But if the two faults are on different phases, they add vectorially and may even sum up to zero.

Figure 7 shows an example in which there are two separate faults: 400mA on a machine in one shop, 250mA on a machine in another shop. The vector sum is not 650mA, but 350mA. If you switch off the machine with the 250mA fault, the reading increases, indicating faults on different phases.

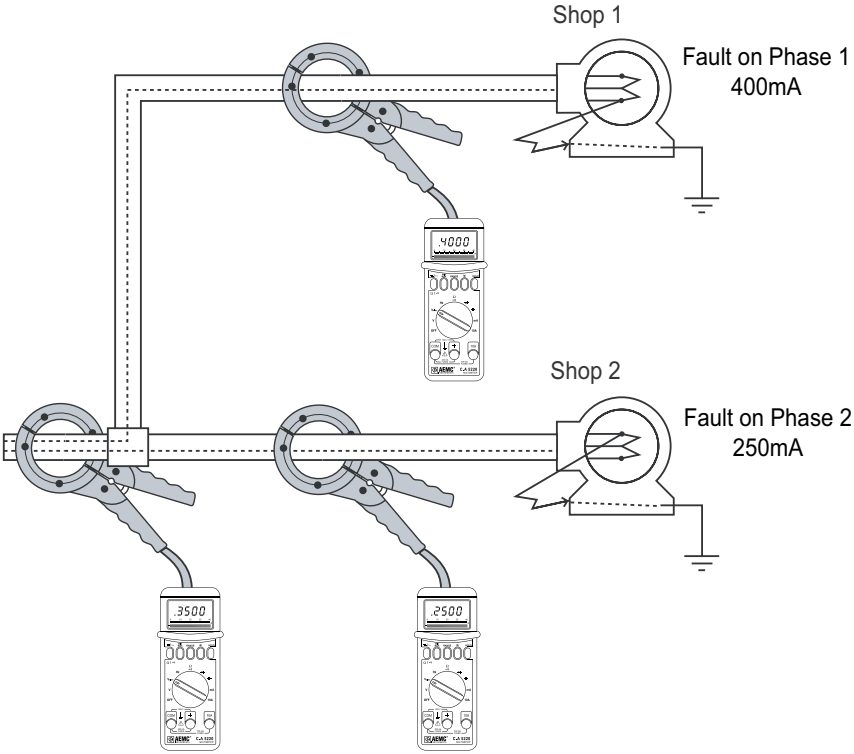

Figure 7

4.3.3 Neutral Grounded Through an Impedance

Follow the procedure the same way as for a grounded neutral installation, but with care. When the neutral is grounded through an impedance, a fault (even a serious one) may not trip the circuit breaker, and the circuit will stay live.

4.3.4 Ungrounded System

In order to measure on an ungrounded system, the optional Artificial Neutral Model AN-1 must be used in conjunction with the Model 2620.

For measurement procedures, see the information in this manual in Chapter 5.

4.4 Commonly Asked Questions

Q. I have found an indication of 40 to 50mA on one of the main feeders with 300A on the line. Is this value a fault?

A. With 300A on the line, it is possible to find an undesired current of that magnitude. Different cables in the installation may not have equivalent capacitance and resistance. These cables provide for high current and, of course, we apply a high current. Therefore, we may have a capacitive influence which corresponds to 45mA.

Q. Must the conductors be centered within the jaws?

A. You should avoid placing the conductors close against the magnetic circuit near the gaps, and should group the conductors as much as possible. Best results are obtained while centering the conductor. You must also ensure that the jaw mating surface are perfectly clean and that nothing prevents them from closing tightly.

Q. Is it possible when checking cables which run parallel, yet supply the same load, to clamp the detector over each cable separately?

A. When there are parallel cables, the measurement is valid only if the detector includes the cables together. In fact, if you take each one separately, it is highly probable that the distribution of current in the parallel cables is not even. These differences can be caused by the fact that the cables may not have exactly the same impedance.

Q. I have detected faults of 400mA and 250mA on branch circuits being supplied by the feeder. But clamping onto the incoming feeder resulted in an indication of 350mA. Can you explain why 400mA + 250mA = 350mA?

A. The detector measures residual current; in other words, the vectorial sum of the currents. If you have a 400mA fault and a 250mA fault on the same phase, you have every chance of finding 650mA. But, if you have two faults on different phases, they add as vectors actually, in a very theoretical case we could even find zero.

Q. The Model 2620 detects faults caused by insulation failures. How does detecting faults with the detector differ from information resulting from megohmmeter insulation tests?

A. The Model 2620 will detect electrical faults while the equipment is still in operation. This offers two distinct advantages. First, it is not necessary to shut the equipment down, eliminating costly down time; and second, you may detect faults that would not be evident under non-energized conditions.

Q. Would it be possible to clamp the Model 2620 directly around the grounding detector?

A. Yes, in some instances it may be possible to detect fault current on a specific motor if there is a dedicated grounding path. However, if several devices are sharing a common ground, it should be noted that the fault may be occurring on any one (or multiple) of the devices.

ARTIFICIAL NEUTRAL

⚠ Warning ⚠

- The measurement of leakage current is done specifically with a clamp designed for this purpose.
- The Artificial Neutral must be connected to a known low resistance ground.
- If fault finding exceeds 15 minutes, remove the Artificial Neutral from its carrying case.
- The Artificial Neutral must always be in the OFF position when connecting the leads.
- Always make connections from the instrument to the circuit under test.
- Always inspect the instrument and accessory leads for serviceability prior to use. Replace defective parts immediately.
- Never use the instrument on electrical conductors rated above 600V.

5.1 Description

The Artificial Neutral is an accessory for the AEMC Model 2620 Ground Fault /Leakage Detector. It generates a grounded artificial neutral to allow the measurement of fault currents on ungrounded 3 phase systems.

In an ungrounded system, the impedance between the transformer, neutral, and ground is infinity. Therefore, independent of the load current, no ground fault current should flow. The Artificial Neutral creates an intermittent return path for the ground fault current enabling the troubleshooter to distinguish it from load current.

The Artificial Neutral is grounded intermittently through a relay driven by an internal clock. This periodic grounding technique performs three functions:

- Limits the possibility of insulation faults within the case.
- Allows better discrimination of actual fault current.
- Limits instrument overheating

Relay closure time is selected externally (Fast or Slow) so that the ground fault clamp can be used on either an analog or digital display. When using on digital multimeter, place the switch in the slow position; when using an analog multimeter, set the switch to the fast position.

An internal buzzer, also driven by the relay, is activated each time the neutral connection is grounded. Three lights, one for each phase, show the presence of each of the three phases in the Artificial Neutral prior to measurement. A fourth green light indicates the instrument is operating.

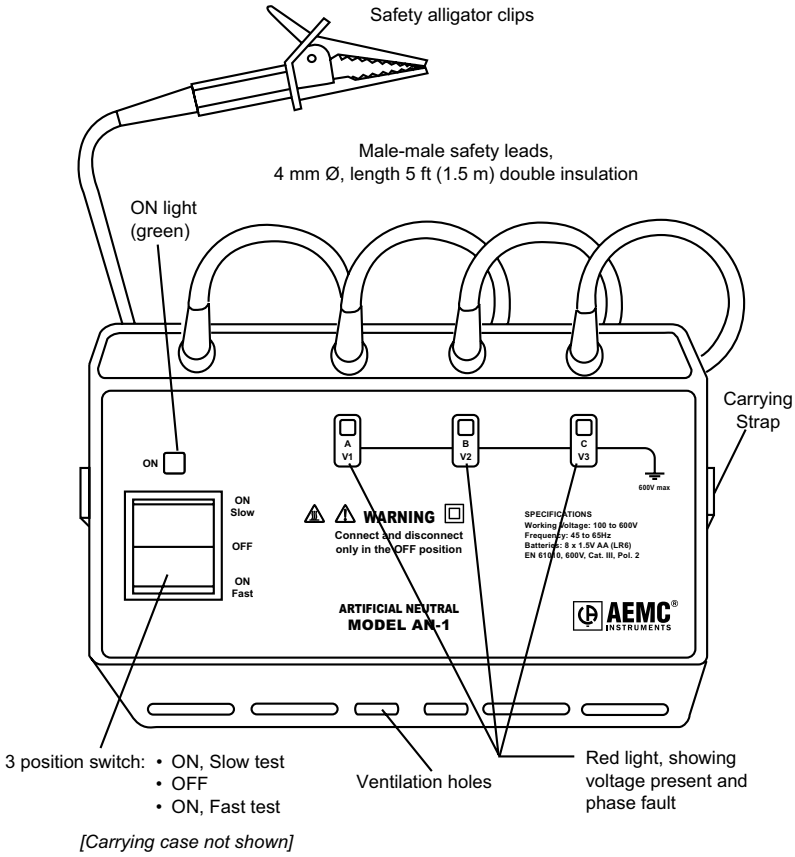

Figure 8

5.2 Specifications

5.2.1 Electrical

Working Voltage: 30 to 600V

Frequency: 45 to 65Hz

Resistance Per Phase: 3.9kΩ ± 5%

Relay Duty Time:
Slow position: 0.5 s
Fast position: 2.3 s

Power Source: Eight 1.5V “AA” batteries

Power Consumption: 180mA (approx)

Average Battery Life: 40 hours

5.2.2 Mechanical

Reference Temperature: 23°C ± 3°C

Operating Temperature: 32° to 122°F (0° to 50°C); 10 to 90% RH

Storage Temperature: -40° to 158°F (-40° to 70°C); 10 to 90% RH

Case: Fire resistant polycarbonate UL94

Color: Yellow

Dimensions: 8.7 x 5.4 x 5.9" (220 x 136 x 150mm)

Weight: 2.9 lbs (1.3kg)

5.2.3 Safety

Dielectric Strength Test: 6kV between terminal and case

CE ⧈

600V CAT III

5.3 Principle of Operation

If there is not an insulation fault on the system, no leakage current will flow to ground. The vector sum of the currents flowing through the three conductors enclosed within the clamp is zero. The display will indicate zero (see Figure 9).

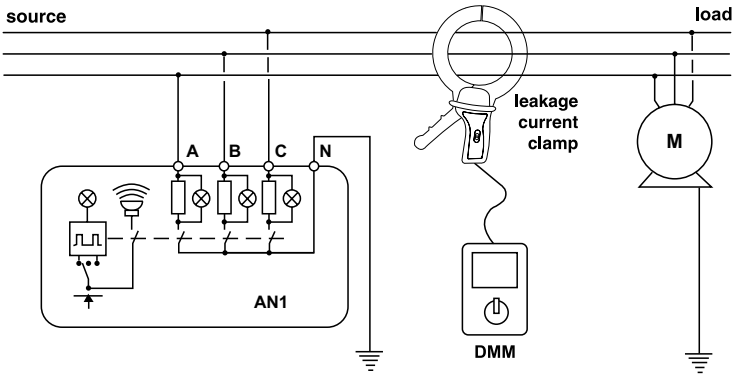

Figure 9

If there is a fault, a leakage current then flows between the faulty phase and ground. The detection of this fault current on an ungrounded system will be intermittent as determined by the rate of relay closure (Figure 10).

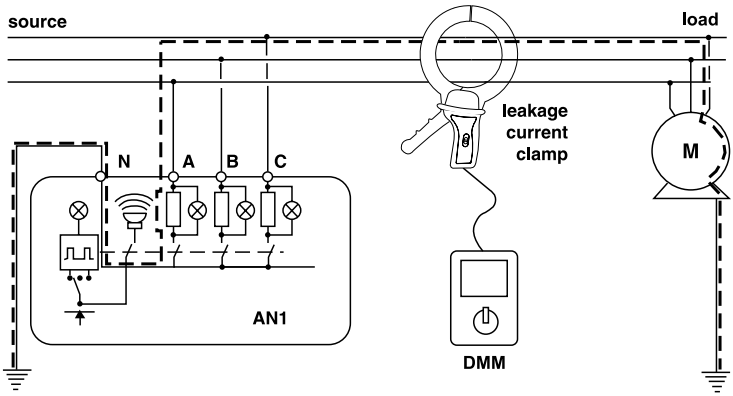

Figure 10

Due to the fault current, the vectorial sums of the current will no longer be zero. Fault current will be indicated by the selection on the Model 2620 clamp of either 1mV per mA or 1mV per A AC.

5.4 Testing Ungrounded Systems

Before starting, ensure that the Artificial Neutral batteries are in good condition. Switch on the instrument (Fast or Slow). The green light must be illuminated, and the buzzer must be activated at the selected rate. If the green light is out, or if the buzzer sounds weak, replace the batteries.

Switch the instrument OFF (green light off). Connect the leads to the appropriate phases of the system under test. At this point, **do not connect the Artificial Neutral to ground**.

- Phase A: RED
- Phase B: BLACK
- Phase C: BLUE

Switch the instrument ON (Fast or Slow). The three phase lights must come on at the same time, then periodically, at the same rate as the buzzer. If one or more do not light, stop the test and verify connections or the existence of a phase fault. Note: There must be at least 30V between phases.

After verifying that all the lights have illuminated properly, turn the instrument OFF and connect the GROUND lead to a known good ground.

To measure the value of the fault, connect the Model 2620 to a multimeter with an appropriate measurement range. Enclose the three phase conductors within the jaws. Switch ON the Artificial Neutral (Fast or Slow) depending on the response time of the measuring instrument. The actual fault measurement must be made when the instrument relay is closed (e.g., when the buzzer sounds). The measured value when the relay is closed is the actual value of the fault current, depending on the selected output signal.

To disconnect the Artificial Neutral, reverse the procedure. Switch the Artificial Neutral OFF, disconnect the GROUND lead, then disconnect each one of the phase leads.

MAINTENANCE

⚠ **WARNING:**

- For maintenance use only specified factory replacement parts.
- To avoid electrical shock, do not attempt to perform any servicing unless you are qualified to do so.
- To avoid electrical shock and/or damage to the instrument, do not get water or other foreign agents into the case. Turn the instrument OFF and disconnect the unit from all the circuits before opening the case.

6.1 Cleaning

- Wipe the case and jaw covers with a lightly moistened cloth and mild detergent.
- Do not use any abrasives or solvents.
- If rusted, the jaw mating surfaces of the Model 2620 may be lightly sanded with very fine sandpaper and then very lightly oiled. Wipe off excess oil and do not let it drip into the case.

Repair and Calibration

To ensure that your instrument meets factory specifications, we recommend that it be scheduled back to our factory Service Center at one-year intervals for recalibration, or as required by other standards or internal procedures.

For instrument repair and calibration:

You must contact our Service Center for a Customer Service Authorization Number (CSA#). This will ensure that when your instrument arrives, it will be tracked and processed promptly. Please write the CSA# on the outside of the shipping container. If the instrument is returned for calibration, we need to know if you want a standard calibration, or a calibration traceable to N.I.S.T. (Includes calibration certificate plus recorded calibration data).

Ship To: Chauvin Arnoux®, Inc. d.b.a. AEMC® Instruments
15 Faraday Drive
Dover, NH 03820 USA

Phone: (800) 945-2362 (Ext. 360)
(603) 749-6434 (Ext. 360)
Fax: (603) 742-2346 or (603) 749-6309
E-mail: repair@aemc.com

(Or contact your authorized distributor)

Costs for repair, standard calibration, and calibration traceable to N.I.S.T. are available.

NOTE: You must obtain a CSA# before returning any instrument.

Technical and Sales Assistance

If you are experiencing any technical problems, or require any assistance with the proper operation or application of your instrument, please call, mail, fax or e-mail our technical support team:

Chauvin Arnoux®, Inc. d.b.a. AEMC® Instruments
200 Foxborough Boulevard
Foxborough, MA 02035 USA

Phone: (800) 343-1391
(508) 698-2115
Fax: (508) 698-2118
E-mail: techsupport@aemc.com
www.aemc.com

NOTE: Do not ship Instruments to our Foxborough, MA address.

Limited Warranty

The Model 2620 is warranted to the owner for a period of one year from the date of original purchase against defects in manufacture. This limited warranty is given by AEMC® Instruments, not by the distributor from whom it was purchased. This warranty is void if the unit has been tampered with, abused or if the defect is related to service not performed by AEMC® Instruments.

For full and detailed warranty coverage, please read the Warranty Coverage Information, which is attached to the Warranty Registration Card (if enclosed) or is available at www.aemc.com. Please keep the Warranty Coverage Information with your records.

What AEMC® Instruments will do:

If a malfunction occurs within the one-year period, you may return the instrument to us for repair, provided we have your warranty registration information on file or a proof of purchase. AEMC® Instruments will, at its option, repair or replace the faulty material.

REGISTER ONLINE AT:
www.aemc.com

Warranty Repairs

What you must do to return an Instrument for Warranty Repair:

First, request a Customer Service Authorization Number (CSA#) by phone or by fax from our Service Department (see address below), then return the instrument along with the signed CSA Form. Please write the CSA# on the outside of the shipping container. Return the instrument, postage or shipment pre-paid to:

Ship To: Chauvin Arnoux®, Inc. d.b.a. AEMC® Instruments
15 Faraday Drive • Dover, NH 03820 USA
Phone: (800) 945-2362 (Ext. 360)
(603) 749-6434 (Ext. 360)
Fax: (603) 742-2346 or (603) 749-6309
E-mail: repair@aemc.com

Caution: To protect yourself against in-transit loss, we recommend you insure your returned material.

NOTE: You must obtain a CSA# before returning any instrument.

08/14

99-MAN 100292 v6

Chauvin Arnoux®, Inc. d.b.a. AEMC® Instruments
15 Faraday Drive • Dover, NH 03820 USA • Phone: (603) 749-6434 • Fax: (603) 742-2346
www.aemc.com