MPI Magnetostrictive Level Sensors User Manual

For the Series MPI-F
Flexible Stem, Intrinsically Safe Probe

APG®

Doc #9005623
Part #200337
Rev A, 12/2019

Table of Contents

Introduction iii

Warranty and Warranty Restrictions iv

Chapter 1: Specifications and Options 1

- Dimensions 1-2
- Specifications 3
- Model Number Configurator 4
- System Wiring Diagrams and IS Use Case Diagrams 5-6

Chapter 2: Installation and Removal Procedures and Notes 7

- Tools Needed 7
- ATEX Stated Conditions of Use 7
- Physical Installation Notes 7
- Physical Installation Instructions 8
- Electrical Installation 9
- Removal Instructions 9

Chapter 3: Programming 10

- Modbus Programming 10
- Modbus Programming with RST-6001 and APG Modbus Software 10
- Modbus Register Lists for MPI-F 10-11
- MPI-F Modbus Sensor Parameters 12-16
- MPI-F Modbus Application Type Parameters 17-21

Chapter 4: Maintenance 22

- General Care 22
- Repair and Returns 22

Chapter 5: Hazardous Location Installation and Certification 23

- Intrinsically Safe Installation Drawing for Hazardous Locations 23
- CSA Certificate of Compliance 24-26
- IECEx Certificate of Conformity 27-29
- EU Declaration of Conformity 30

Introduction

Thank you for purchasing an MPI series magnetostrictive level sensor from APG. We appreciate your business and your trust. Please take a few minutes to familiarize yourself with your MPI and this manual.

The MPI level sensors provide highly accurate and repeatable level readings in a wide variety of liquid level measurement applications. The MPI-F is certified intrinsically safe for installation in hazardous areas by CSA, ATEX, and IECEx for Class I, Division 1 and Class I, Zones 0 environments. The MPI-F's flexible stainless steel stem allows for easier installation in extra tall tanks.

Reading your label

Every APG instrument comes with a label that includes the instrument's model number, part number, and serial number. Please ensure that the part number on your label matches your order. The following electrical ratings and approvals are also listed on the label. Please refer to the CSA Certificate of Compliance at the back of this manual for further details.

C 237484 US

8-24 VDC, Imax = 280 mA
Class I, Division 1, Groups C, D, T4; IP65
Class I, Zone 0, Ex/AEX ia, IIB, T4, Ga
Ex ia IIB, T4 ,Ga
(Ta = -40°C to 85°C)

Intrinsically Safe Wiring Requirements:
U_i= 28 VDC, I_i = 280 mA, P_i = 0.850 W , L_i = 3.50 µH, C_i = 0.374 µF

ATEX Certificate Number: Sira 19ATEX2072X

II 1G
Ex ia IIB T4 Ga
Ta: -40°C to 85°C

U_i = 28 V, I_i = 280 mA, P_i = 0.850 W, L_i = 3.50 µH, C_i = 0.374 µF

IECEx SIR 19.0026X
Ex ia IIB T4 Ga
Ta: -40°C to 85°C

IMPORTANT: MPI-F level sensor MUST be installed according to drawing 9009451 (Intrinsically Safe Installation Drawing for Hazardous Locations) on page 23 to meet listed approvals. Faulty installation will invalidate all safety approvals and ratings.

DANGER: OPEN CIRCUIT BEFORE REMOVING COVER or KEEP COVER TIGHT WHILE CIRCUITS ARE ALIVE;
AVERTISSEMENT -- COUPER LE COURANT AVANT D'ENLEVER LE COUVERCLE, ou GARDER LE COUVERCLE FERME TANT QUE LES CIRCUITS SONT SOUS TENSION.

DANGER: WARNING -- EXPLOSION HAZARD -- SUBSTITUTION OF COMPONENTS MAY IMPAIR SUITABILITY FOR CLASS I, DIVISION 2;
AVERTISSEMENT -- RISQUE D'EXPLOSION -- LA SUBSTITIOND E COMPOSANTSP EUTR ENDRE CE MATERIEL INACCEPTABLE POUR LES EMPLACEMENTS DE CLASSE I, DIVISION 2.

DANGER: WARNING -- EXPLOSION HAZARD -- DO NOT DISCONNECT EQUIPMENT UNLESS POWER HAS BEEN SWITCHED OFF OR THE AREA IS KNOWN TO BE NON-HAZARDOUS;
AVERTISSEMENT -- RISQUE D'EXPLOSION -- AVANT DE DECONNECTER L'EQUIPEMENT, COUPER LE COURANT OU S'ASSURER QUE L'EMPLACEMENT EST DESIGNE NON DANGEREUX.

Warranty and Warranty Restrictions

This product is covered by APG's warranty to be free from defects in material and workmanship under normal use and service of the product for 24 months. For a full explanation of our Warranty, please visit https://www.apgsensors.com/about-us/terms-conditions. Contact Technical Support to receive a Return Material Authorization before shipping your product back.

Scan the QR code below to read the full explanation of our Warranty on your tablet or smartphone.

Tel: 1/888/525-7300 • Fax: 1/435/753-7490 • www.apgsensors.com • sales@apgsensors.com

Chapter 1: Specifications and Options

- **Dimensions**

MPI-F Sensor Dimensions

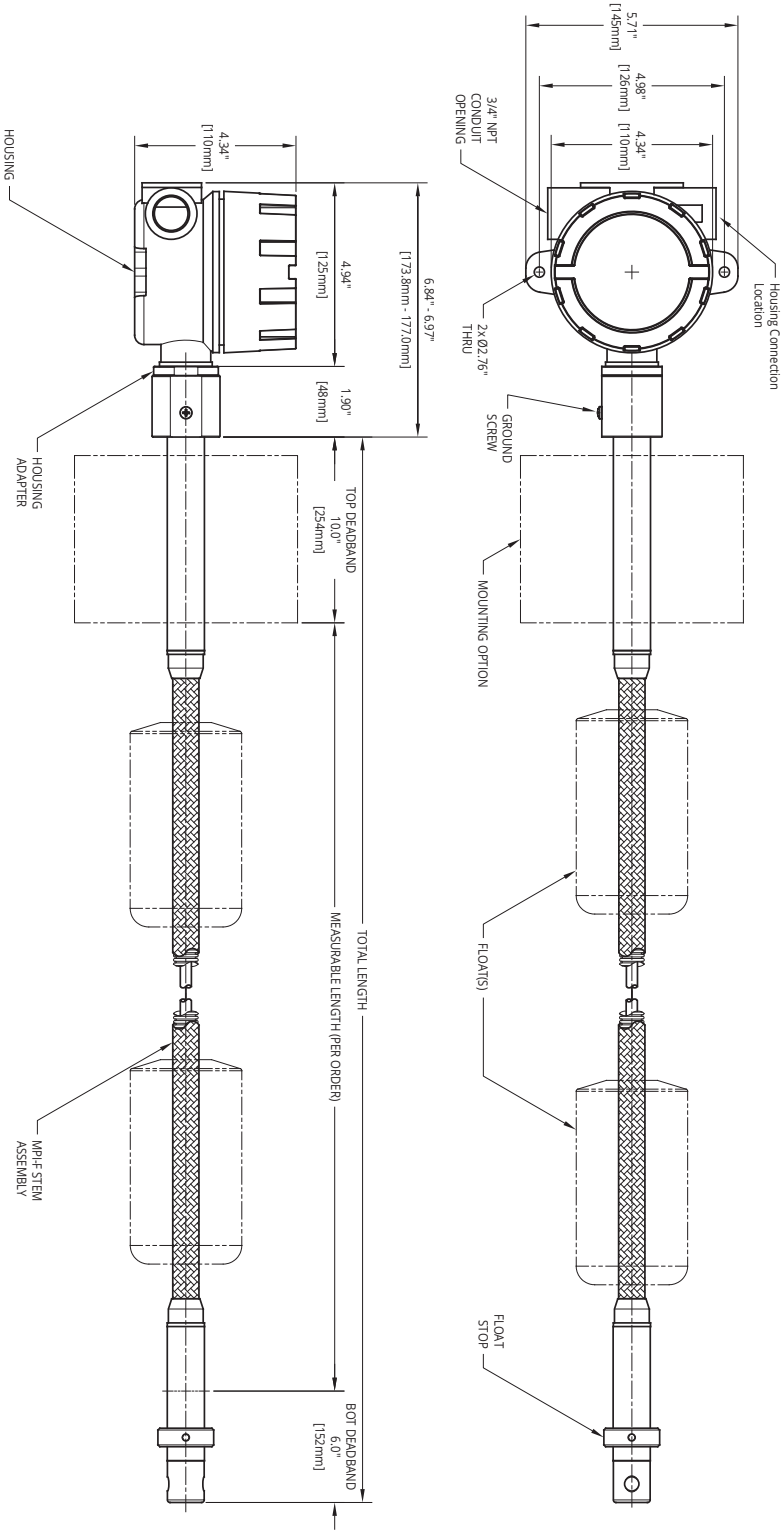

MPI-F Floats

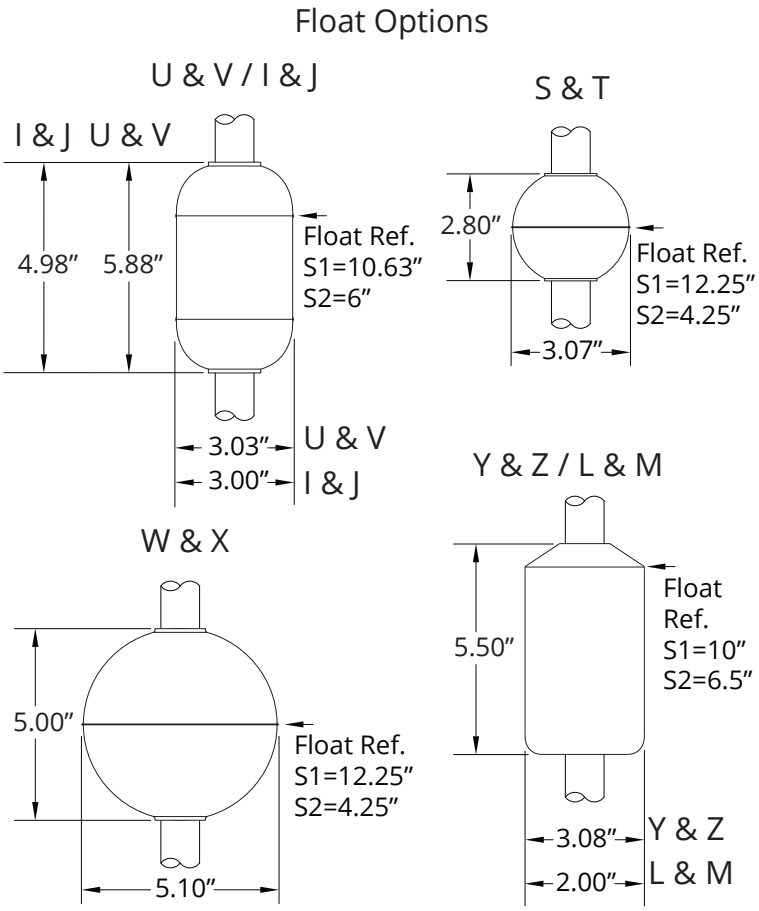

Tel: 1/888/525-7300 • Fax: 1/435/753-7490 • www.apgsensors.com • sales@apgsensors.com

- ## Specifications

Performance

Resolution	0.04 in. (1 mm)
Accuracy	±0.05% of Full Scale or 1mm (whichever is larger)

Environmental

Operating Temperature	-40° to 185° F (-40° to 85° C)
Enclosure Protection	NEMA 4X, IP65

Electrical

Supply Voltage	8-24 VDC on sensor
Typical Current Draw	25 mA
Protection	Reverse Polarity and Surge (per IEC 61000-4-5, 4-6, 4-7)

Materials of Construction

Housing	Cast aluminum, epoxy coated
Stem	7/8” ø 316L SS Flexible Tubing with Braid
Mounting (slide)	316L SS
Compression Fitting (slide)	Aluminum with Neoprene bushing

Connectivity

Output	Modbus RTU (RS-485)

Programming

RS-485	Optional RST-6001 USB-to-RS-485 converter

• Model Number Configurator

Model Number: MPI - _F_ __5__ _____ - _____ _____ - _____ _____ _____ __B__ - _____ - _____ - _____
A B C D E F G H I J K L

A. Stem Type
☐ **F** 7/8 in. diameter Flexible Tubing with Braid, 316L SS

B. Output
☐ **5** Modbus RTU, with surge protection, Intrinsically Safe

C. Housing Type
All Housing Die-cast Aluminum, NEMA 4X, IP68, Blue
☐ **__**▲ Large Housing
☐ **B** Large Housing with window

D. Float 1 (Top Float)
☐ **Z** 5.5h x 3d in. Red Polyurethane (0.65 SG)
☐ **Y** 5.5h x 3d in. Blue Polyurethane (0.94 SG)
☐ **X** 5 in. Round 316L SS (0.52 SG)
☐ **W** 5 in. Round 316L SS (0.92 SG)
☐ **V** 6h x 3d in. Oval 316L SS (0.58 SG)
☐ **U** 6h x 3d in. Oval 316L SS (0.94 SG)
☐ **T** 3 in. Round 316L SS (0.60 SG)
☐ **S** 3 in. Round 316L SS (0.94 SG)
☐ **M** 5.5h x 2d in. Red Polyurethane (0.57 SG)
☐ **L** 5.5h x 2d in. Blue Polyurethane (0.94 SG)
☐ **J** 5h x 3d in. Oval Titanium 2 (0.60 SG)
☐ **I** 5h x 3d in. Oval Titanium 2 (0.92 SG)
☐ **N** None

E. Float 2 (optional)
☐ **N** None
☐ **Y** 5.5h x 3d in. Blue Polyurethane (0.94 SG)
☐ **W** 5 in. Round 316L SS (0.92 SG)
☐ **U** 6h x 3d in. Oval 316L SS (0.94 SG)
☐ **L** 5.5h x 2d in. Blue Polyurethane (0.94 SG)
☐ **I** 5h x 3d in. Oval Titanium 2 (0.92 SG)

F. Mounting Type
☐ **F** Flat Face ANSI Flange 150#
(Sizes: 2, 2.5, 3, 4, 5, 6)

☐ **R** Raised Face ANSI Flange 150#
(Sizes: 2, 2.5, 3, 4, 5, 6)

☐ **S** Tri Clamp
(Sizes: 2, 2.5, 3)

☐ **P** NPT Plug 150#
(Sizes: 2, 2.5, 3, 4)

☐ **N** None

G. Mounting Size
☐ **__** See Mounting Type for available sizes

H. Mounting Connection
☐ **W** Welded (fixed)
☐ **S** Slide with Compression Fitting (adjustable)

I. Stem Material
☐ **B** 316L SS

J. Total Stem Length in Inches
☐ **__** Min. 120 in. - Max. 300 in.

K. Temperature Sensor Options
☐ **N** None
☐ **1D**▲ Digital Temperature Sensor A, 12 in. from bottom of probe
☐ **2D** Digital Temperature Sensors A, B
☐ **3D** Digital Temperature Sensors A, B, C
☐ **4D** Digital Temperature Sensors A, B, C, D
☐ **5D** Digital Temperature Sensors A, B, C, D, E
☐ **6D** Digital Temperature Sensors A, B, C, D, E, F
☐ **7D** Digital Temperature Sensors A, B, C, D, E, F, G

Note: Temperature sensors B - G are spaced evenly between A and probe's zero reference, with minimum of 2 in. required between temperature sensors.

L. Housing Connection
☐ **N**▲ None
☐ **A** 3/4" to 1/2" NPT Reducing Threads
☐ **B** Cable Gland (Cable sold separately)
☐ **M** 4-pin M12 Micro Connector Male
☐ **F** 4-pin M12 Micro Connector Female

Note: ▲This option is standard.

Tel: 1/888/525-7300 • Fax: 1/435/753-7490 • www.apgsensors.com • sales@apgsensors.com

- **System Wiring Diagrams and IS Use Case Diagrams**

Modbus System Wiring For MPI-F Sensors

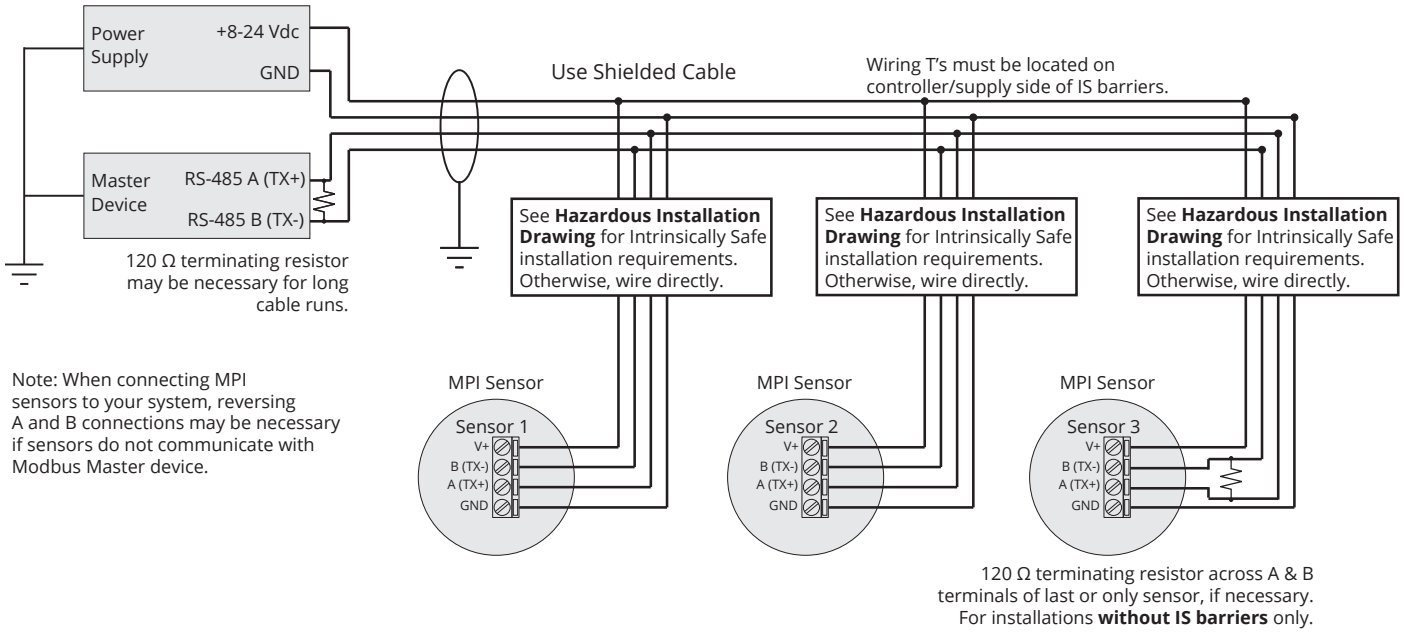

Modbus System Wiring with RST-6001 For MPI-F Sensors

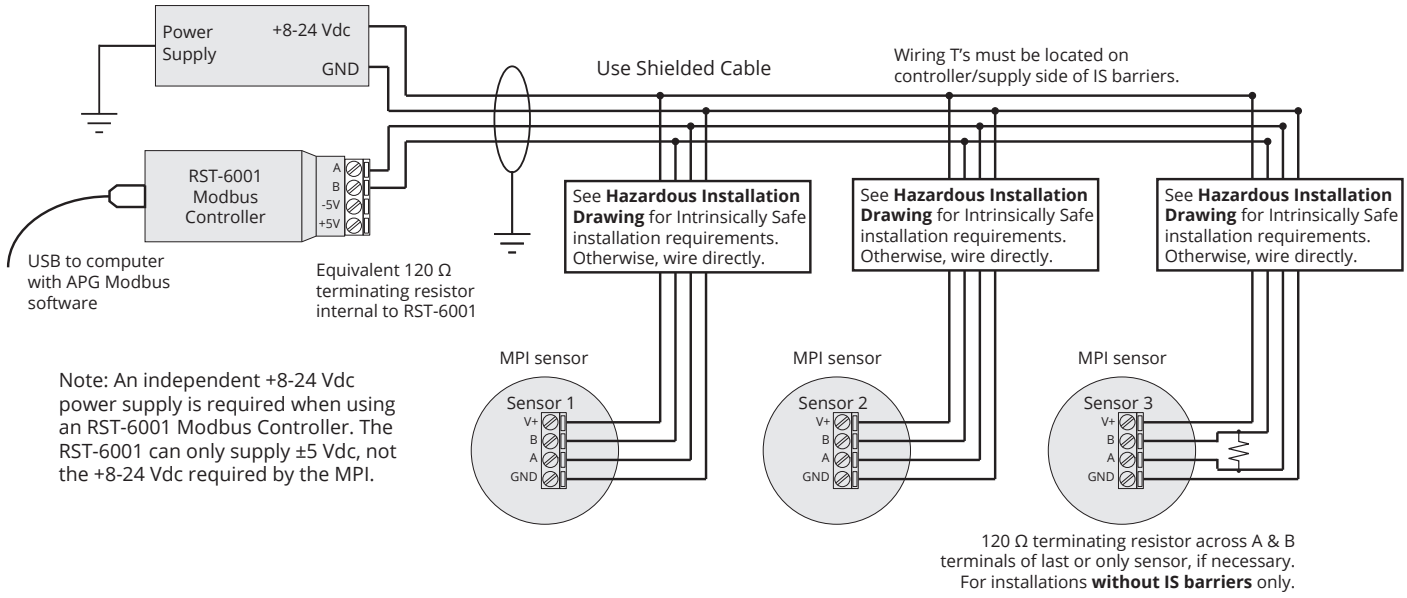

ℹ IMPORTANT: Refer to Chapter 5 for Intrinsically Safe Installation Drawing for Hazardous Locations.

MPI - MDI Use Case Diagram

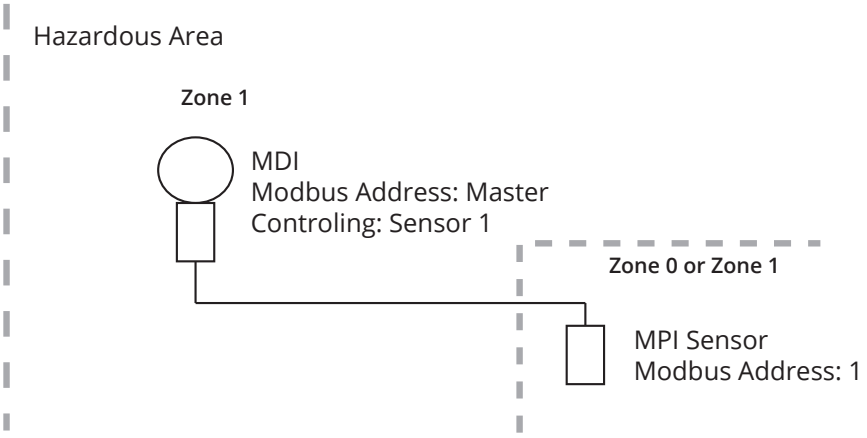

Single MDI controlling a single MPI sensor

- MDI is located in Zone 1 area. MPI can be in Zone 0 or Zone 1 without additional barriers.
- MDI is battery powered; allows for software-based switchable power for MPI.
- MPI is powered by MDI battery.
- No external controller.
- No IS barrier required.
- Any changes to MPI settings done via MDI buttons.

MPI - MDI with Passive Controller Use Case Diagram

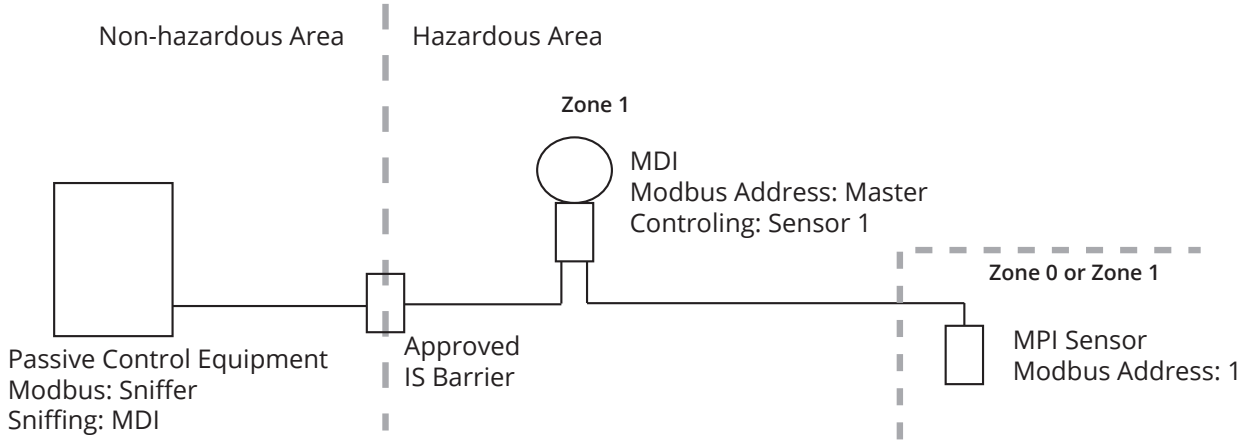

Single MDI controlling a single MPI sensor with Passive Control Equipment

- MDI is located in Zone 1 area. MPI can be in Zone 0 or Zone 1 without additional barriers.
- MDI is battery powered; allows for software-based switchable power for sensor.
- MPI is powered by MDI battery.
- External controller passively reads (Sniffs) readings from MDI.
- External controller can activate MDI.
- Approved IS Barrier required between Passive Control Equipment and MDI.
- Auxiliary connection required for MDI.
- Any changes to MPI settings done via MDI buttons.

Tel: 1/888/525-7300 • Fax: 1/435/753-7490 • www.apgsensors.com • sales@apgsensors.com

Chapter 2: Installation and Removal Procedures and Notes

• Tools Needed

You will need the following tools to install your MPI level sensor:

- Wrench sized appropriately for MPI mounting
- Wrench sized appropriately for conduit connections
- Flat-head screwdriver for wire terminals
- Channel lock pliers for tightening compression fitting
- 1/8" Hex Allen wrench for screws on float stop(s).
- Pliers for bending cotter pin.

• ATEX Stated Conditions of Use

- Under certain extreme circumstances, the non-metalic parts incorporated in the enclosure of this equipment may generate an ignition-capable level of electrostatic charge. Therefore the equipment shall not be installed in a location where the external conditions are conducive to the build-up of electrostatic charge on such surfaces. In addition, the equipment shall only be cleaned with a damp cloth.
- The enclosure is manufactured from Aluminum. In rare cases, ignition sources due to impact and friction sparks could occur. This shall be considered during installation.

• Physical Installation Notes

The MPI-F should be installed in an area--indoors or outdoors--which meets the following conditions:

- Ambient temperature between -40°C and 85°C (-40°F to +185°F)
- Relative humidity up to 100%
- Altitude up to 2000 meters (6560 feet)
- IEC-664-1 Conductive Pollution Degree 1 or 2
- IEC 61010-1 Measurement Category II
- No chemicals corrosive to stainless steel (such as NH_3, SO_2, Cl_2)
- Ample space for maintenance and inspection

Additional care must be taken to ensure:

- The probe is located away from strong magnetic fields, such as those produced by motors, transformers, solenoid valves, etc.
- The medium is free from metallic substances and other foreign matter.
- The probe is not exposed to excessive vibration.
- The float(s) fit through the mounting hole. If the float(s) does/do not fit, it/they must be mounted on the stem from inside the vessel being monitored.
- The float(s) is/are oriented properly on the stem (See Figure 2.1). MPI-F floats are installed by customer.

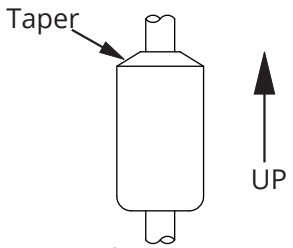

Figure 2.1

ℹ IMPORTANT: Floats must be oriented properly on the stem, or sensor readings will be inaccurate and unreliable. Untapered floats will have a sticker indicating the top of the float. Remove sticker prior to use.

ℹ IMPORTANT: MPI-F level sensor MUST be installed according to drawing 9009451 (Intrinsically Safe Installation Drawing for Hazardous Locations) on page 23 to meet listed approvals. Faulty installation will invalidate all safety approvals and ratings.

• Physical Installation Instructions

Ensure that all components have been received, including:

- MPI-F sensor head and stem
- Float (or floats, if two floats purchased)
- Optional Slide Mount
- Weight, Clevis Pin, and Cotter Pin
- Assembly drawing

Assemble sensor mounting, float(s), weight and pins at installation location, if possible.

- Slide mounting option onto stem. Loosen compression cap so it will slide easily on stem.
- Note: If the floats do not fit through the tank/vessel mounting hole, mount them on the stem from inside the vessel being monitored. Then secure the sensor to the vessel.
- Slide floats onto stem. If using two floats, slide the lighter float on first. Tops of floats will be indicated by sticker. After ensure top of float is toward MPI-F sensor head, remove sticker.
- For sensors with float stops, refer to the assembly drawing included with the sensor for float stop installation locations.
- Insert weight on end of stem. Hold in place with clevis pin.
- Insert cotter pin in clevis pin. Bend ends of cotter pin back to lock pins into place.

Install MPI-F sensor on tank

- When lifting and installing the sensor be sure to minimize the bending angle between the rigid stem at the top and bottom of the sensor and the flexible stem in-between. Sharp bends at those points could damage the sensor.
- If your sensor's stem and floats fit through the mounting hole, insert the weight and the floats into the mount opening.
- Carefully unroll and feed the MPI-F sensor stem into the tank. Slide the mount up to the top of the stem.
- When the weight is on the bottom of the tank, secure the mounting option to the vessel.
- Take any slack out of the flexible stem. Tighten the compression fitting to hold stem in place.

Tel: 1/888/525-7300 • Fax: 1/435/753-7490 • www.apgsensors.com • sales@apgsensors.com

- ## Electrical Installation

  - Remove the housing cover of your MPI.
  - Feed system wires into MPI through 3/4” NPT conduit openings. Any fittings used must be UL/CSA Listed for CSA installation.
  - Connect wires to MPI terminals. Use crimped ferrules on wires, if possible.
  - Replace the housing cover.

  See System Wiring Diagrams and IS Use Case Diagrams (pages 5-6) for Modbus wiring examples.

- ## Removal Instructions

  Removing your MPI level sensor from service should be done with care.

  - If the floats on your sensor fit through the mounting hole, carefully lift the entire sensor assembly out of and away from the vessel.
  - If the floats on your sensor do not fit through the mounting hole, they will need to be removed from the stem before the sensor can be removed. Be sure to drain the vessel being monitored to allow access to the floats and stem for removal.
  - Clean the stem and floats of any build up or debris and inspect for damage.
  - Store your sensor in a dry place, at a temperature between -40° F and 180° F.

Chapter 3: Programming

• Modbus Programming

MPI-F series sensors use standard Modbus RTU protocol (RS-485). The sensors can only operate as slave devices. Sensor default transmission settings are **9600 Baud**, **8 Bits**, **1 Stop Bit**, **No Parity**, and require a minimum delay of 300 ms between transactions. See MPI-F Modbus Register Lists on pages 10 and 11.

NOTE: For more information about Modbus RTU, please visit www.modbus.org.

• Modbus Programming with RST-6001 and APG Modbus Software

An APG RST-6001 Modbus Controller can be used in tandem with APG Modbus software to program and control up to 20 MPI-F series sensors. Through APG Modbus, you can monitor the raw readings from the sensor, configure the data for distance, level, volume, or weight, and enter measurements for a strapping chart. See MPI-F Modbus Register Lists on pages 10 and 11.

NOTE: For APG Modbus programming instructions, or to download APG Modbus software, please visit www.apgsensors.com/suppport.

• Modbus Register Lists for MPI-F

Input Registers (0x04)

Register	Returned Data
30299	Model Type
30300	Raw Top Float Reading (in mm, unsigned)
30301	Raw Bottom Float Reading (in mm, unsigned)
30302	Temperature Reading (in ^{0}C, signed)
30303-30304	Calculated Top Float Reading (in selected Units)
30305-30306	Calculated Bottom Float Reading (in selected Units)
30307	Version
30308	API 18.2 TEMP (in ^{0}C, signed)

NOTE: The Calculated Readings will be returned without a decimal place. In order to obtain the true result, the Decimal Place setting must be taken into account.

Tel: 1/888/525-7300 • Fax: 1/435/753-7490 • www.apgsensors.com • sales@apgsensors.com

Holding Registers (0x03)

Register	Function	Value Range
40400	Device Address	1 to 247
40401	Units	1, 2, 3
40402	Application Type	0, 1, 2, 3, 4, 5, 6, 7, 8, 9, 10, 11
40403	Volume Units	1, 2, 3, 4, 5, 6, 7
40404	Decimal Place	0, 1, 2, 3
40405	**†**Max Distance	0 to 32,768 mm
40406	Full Distance	0 to 32,768 mm
40407	Empty Distance	0 to 32,768 mm
40408	**†**Sensitivity	0 to 100
40409	**†**Pulses	5 to 20
40410	**†**Blanking	0 to 10,364 mm
40411	NA	NA
40412	**†**Averaging	1 to 50
40413	**†**Filter Window	0 to 10,364 mm
40414	**†**Out of Range Samples	1 to 255
40415	**†**Sample Rate	50 to 1,000 msec.
40416	**†**Multiplier	1 to 1,999 (1000 = 1.000)
40417	**†**Offset	-10,364 to 10,364 mm
40418	**†**Pre filter	0 to 10,364 mm
40419	**†**Noise limit	0 to 255
40420	Temperature Select	0 to 8
40421	**†**RTD Offset (^{0}C)	NA*****
40422	**†**Float Window	0 to 1,000 mm 0=1 float
40423	**†**1st Float Offset	-10,364 to 10,364
40424	**†**2nd Float Offset	-10,364 to 10,364
40425	**†**Gain Offset	0 to 255
40426	4 mA Set Point	NA*****
40427	20 mA Set Point	NA*****
40428	4 mA Calibration	NA*****
40429	20 mA Calibration	NA*****
40430	t1d	NA*****
40431	t1w	NA*****
40432	t1t	NA*****
40433	t2d	NA*****
40434	t2w	NA*****
40435	t2t	NA*****
40436-40437	Parameter 1 Data	0 to 1,000,000 mm
40438-40439	Parameter 2 Data	0 to 1,000,000 mm
40440-40441	Parameter 3 Data	0 to 1,000,000 mm
40442-40443	Parameter 4 Data	0 to 1,000,000 mm
40444-40445	Parameter 5 Data	0 to 1,000,000 mm
40446	Baud Rate	0, 1, 2, 3, 4
40201	Restore to Factory Defaults	1

*****These registers are not used by the MPI-F, even though they are labeled in the APG Modbus software.
†Setting is factory calibrated. Do not adjust.

- ## MPI-F Modbus Sensor Parameters

40401 - Units

Determines the units of measure for the Calculated Reading when Application Type is set to 0, 1, or 7.

1 = Feet 2 = Inches 3 = Meters

40402 - Application Type

Determines the type of Calculated Reading performed by the sensor.

0 = Distance
1 = Level
2 = Standing Cylindrical Tank with or without Hemispherical Bottom
3 = Standing Cylindrical Tank with or without Conical Bottom
4 = Standing Rectangular Tank with or without Chute Bottom
5 = Horizontal Cylindrical Tank with or without Spherical Ends
6 = Spherical Tank
7 = Pounds (Linear Scaling)
8 = N/A
9 = Vertical Oval Tank
10 = Horizontal Oval Tank
11 = Strapping Chart

See MPI-F Modbus Application Type Parameters pages 17-21.

40403 - Volume Units

Determines the units of measure for the Calculated Reading when Application Type is set to 2 - 6 or 9 -11.

1 = Feet^3 5 = Liters
2 = Million Feet^3 6 = Inches^3
3 = Gallons 7 = Barrels
4 = Meters^3

40404 - Decimal Place

Determines the number of decimal places included in the Calculated Reading(s). The Calculated Reading will always be returned as a whole number.

For example, a Calculated Reading of 1126.658 (gallons, ft^3, etc.) will be returned as follows:

Decimal Place = 0 Volume = 1127 (rounded to nearest whole number)
Decimal Place = 1 Volume = 11267 (divide by 10 to get true result)
Decimal Place = 2 Volume = 112666 (divide by 100 to get true result)
Decimal Place = 3 Volume = 1126658 (divide by 1000 to get true result)

Tel: 1/888/525-7300 • Fax: 1/435/753-7490 • www.apgsensors.com • sales@apgsensors.com

40405 - Maximum Distance (Factory Calibrated)

Sets the distance (beginning from the Zero Reference) to the point where the sensor will stop looking for float signals, usually the bottom of the stem. A float beyond the Maximum Distance value will not be detected.

40406 - Full Distance

Sets the positive distance (beginning from the sensor Zero Reference) to the point where the monitored vessel is considered full.

40407 - Empty Distance

Sets the positive distance (beginning from the Zero Reference) to the point where the monitored vessel is considered empty (usually the bottom of the stem).

40408 - Sensitivity (Factory Calibrated)

Sets the level of gain that is applied to the returning float signal.

40409 - Pulses (Factory Calibrated)

Controls the duration of the signal being sent down the magnetostrictive wire.

40410 - Blanking (Factory Calibrated)

Sets the blanking distance, which is the zone from the Zero Reference of the sensor to the point from which the first signal will be valid. Signals from a float in the blanking area will be ignored.

40412 - Averaging (Factory Calibrated)

Sets the number of qualified received float signals to average for the raw reading. Qualified received signals are placed in a first-in, first-out buffer, the contents of which are averaged for the raw reading. The larger the number of qualified received signals being averaged, the smoother the reading will be, and the slower the reading will be to react to quickly changing targets.

40413 - Filter Window (Factory Calibrated)

Determines the physical range (0 - 10,364 mm) of qualified received signals, based on the current raw reading. Signals beyond the +/- Filter Window range of the current reading will not qualify unless the average moves. Signals outside the extents of the Filter Window are written to the Out of Range samples buffer (Holding Register 40414). See Figure 3.1.

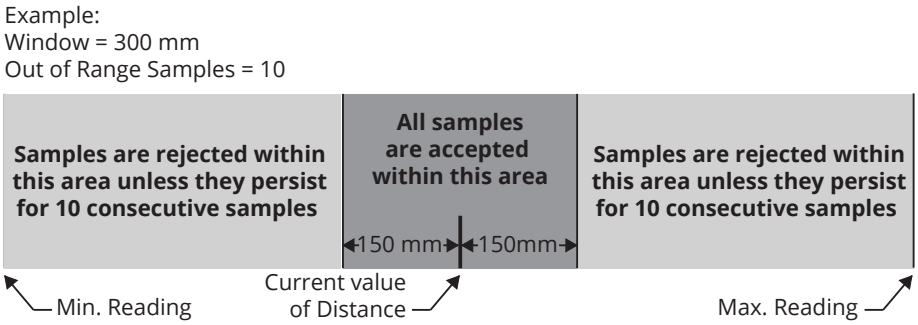

Figure 3.1

40414 - Out of Range Samples (Factory Calibrated)

Sets the number of consecutive samples outside the Filter Window (Holding Register 40413) necessary to automatically adjust the current reading and move the Filter Window.

40415 - Sample Rate (Factory Calibrated)

Sets the update rate of the sensor (between 50 - 1000 ms). Shorter time delays allow for quicker sensor response times to changing levels. Typical setting is 200 ms. Settings under 200 ms are not recommended.

40416 - Multiplier (Factory Calibrated)

Calibrates the distance reading span. The Multiplier is shown by the values 1 - 1999, but these values are understood to represent 0.001 - 1.999. The default of 1000 (i.e. 1.000) is used for most applications.

Tel: 1/888/525-7300 • Fax: 1/435/753-7490 • www.apgsensors.com • sales@apgsensors.com

40417 - Offset (Factory Calibrated)

Sets the Zero Reference of the sensor, the point from which the calculated distance is measured.

40418 - Pre filter

Defines the physical range (0 - 10,364 mm) of the start up (pre-filter) window. Four sample readings must be found within the Pre filter window for the MPI sensor to successfully start up.
This register is used for factory diagnostics only.

40419 - Noise limit

Sets the limit for number of signals (0-255) outside the Pre filter range for the MPI at start up. If the Noise Limit is reached before four readings register within the Pre filter window, the MPI will not start up.
This register is used for factory diagnostics only.

40420 - Temperature Select

Selects the temperature sensor reading to be displayed in Input Register 30302.

MPI-F sensors can accomodate up to seven digital temperature sensors in the stem.

0 = Average of sensors A - G

1 = Digital Temperature Sensor A	5 = Digital Temperature Sensor E
2 = Digital Temperature Sensor B	6 = Digital Temperature Sensor F
3 = Digital Temperature Sensor C	7 = Digital Temperature Sensor G
4 = Digital Temperature Sensor D	8 = N/A

40422 - Float Window (Factory Calibrated)

Sets the distance (0 - 1000 mm) between the first (i.e. top) float and the point at which the sensor will begin looking for the second (bottom) float. 0 indicates a single float.

40423 - 1st Float Offset (Factory Calibrated)

Used to calibrate top float reading (-10,364 - 10,364 mm).

40424 - 2nd Float Offset (Factory Calibrated)

Used to calibrate bottom float reading (-10,364 - 10,364 mm).

40425 - Gain Offset (Factory Calibrated)

Used to move the centerline of the float response signal to optimize signal strength (0 - 255).

40446 - Baud Rate

Selects the communication speed between the sensor and the Master Device. All devices on the network must use the same Baud Rate.

APG Modbus Master and Slave devices default to 9600 Baud.

0 = 9600
1 = 19200
2 = 38400
3 = 57600
4 = 115200

40201 - Restore To Factory Defaults

Writing a 1 to this Holding Register will erase any settings changes and restore the factory default settings.

Tel: 1/888/525-7300 • Fax: 1/435/753-7490 • www.apgsensors.com • sales@apgsensors.com

- **MPI-F Modbus Application Type Parameters**

Application 0 - Distance

Register	Function	Value Range
40400	Device Address	1 to 247
40401	Units	1 = Feet, 2 = Inches, 3 = Meters
40402	Application Type	0
40403	Volume Units	--
40404	Decimal (Calculated)	0 - 3

Application 1 - Level

Register	Function	Value Range
40400	Device Address	1 to 247
40401	Units	1 = Feet, 2 = Inches, 3 = Meters
40402	Application Type	1
40403	Volume Units	--
40404	Decimal (Calculated)	0 - 3
40405	Max Distance	(factory set)
40406	Full Distance	0 - 32,768 mm
40407	Empty Distance	0 - 32,768 mm

Application 2 - Volume of Standing Cylindrical Tank ± Hemispherical Bottom

Register	Function	Value Range
40400	Device Address	1 to 247
40401	Units	--
40402	Application Type	2
40403	Volume Units	1 - 7
40404	Decimal (Calculated)	0 - 3
40405	Max Distance	(factory set)
40406	Full Distance	0 - 32,768 mm
40407	Empty Distance	0 - 32,768 mm
40436-40437	Tank Diameter	0 - 1,000,000 (mm)
40438-40439	Radius of Bottom Hemisphere	0 - 1,000,000 (mm)

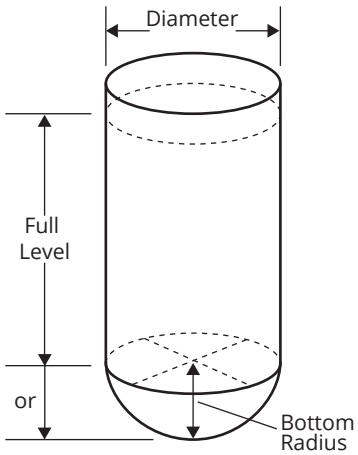

Application 3 - Volume of Standing Cylindrical Tank ± Conical Bottom

Register	Function	Value Range
40400	Device Address	1 to 247
40401	Units	--
40402	Application Type	3
40403	Volume Units	1 - 7
40404	Decimal (Calculated)	0 - 3
40405	Max Distance	(factory set)
40406	Full Distance	0 - 32,768 mm
40407	Empty Distance	0 - 32,768 mm
40436-40437	Tank Diameter	0 - 1,000,000 (mm)
40438-40439	Cone Diameter (at bottom of cone)	0 - 1,000,000 (mm)
40440-40441	Length (height) of Cone	0 - 1,000,000 (mm)

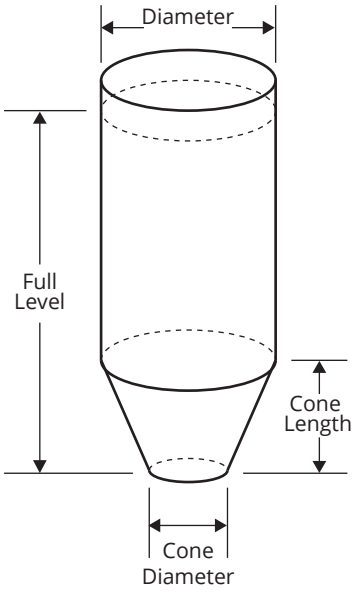

Application 4 - Volume of Standing Rectangular Tank ± Chute Bottom

Register	Function	Value Range
40400	Device Address	1 to 247
40401	Units	--
40402	Application Type	4
40403	Volume Units	1 - 7
40404	Decimal (Calculated)	0 - 3
40405	Max Distance	(factory set)
40406	Full Distance	0 - 32,768 mm
40407	Empty Distance	0 - 32,768 mm
40436-40437	Tank X Dimension	0 - 1,000,000 (mm)
40438-40439	Tank Y Dimension	0 - 1,000,000 (mm)
40440-40441	Chute X Dimension	0 - 1,000,000 (mm)
40442-40443	Chute Y Dimension	0 - 1,000,000 (mm)
40444-40445	Length (height) of Chute	0 - 1,000,000 (mm)

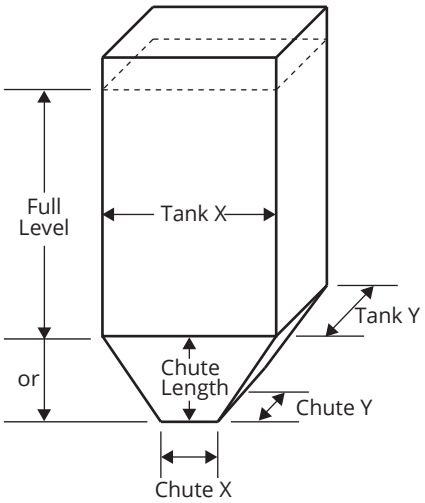

NOTE: For all applications other than Distance, Empty Distance is usually the same as Max Distance.

Tel: 1/888/525-7300 • Fax: 1/435/753-7490 • www.apgsensors.com • sales@apgsensors.com

Application 5 - Volume of Horizontal Cylindrical Tank ± Hemispherical Ends

Register	Function	Value Range
40400	Device Address	1 to 247
40401	Units	--
40402	Application Type	5
40403	Volume Units	1 - 7
40404	Decimal (Calculated)	0 - 3
40405	Max Distance	(factory set)
40406	Full Distance	0 - 32,768 mm
40407	Empty Distance	0 - 32,768 mm
40436-40437	Tank Length	0 - 1,000,000 (mm)
40438-40439	Tank Diameter	0 - 1,000,000 (mm)
40440-40441	Radius of End Hemispheres	0 - 1,000,000 (mm)

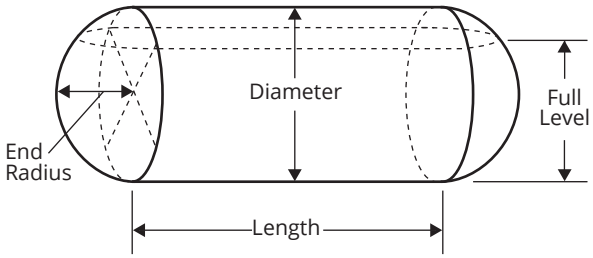

Application 6 - Volume of Spherical Tank

Register	Function	Value Range
40400	Device Address	1 to 247
40401	Units	--
40402	Application Type	6
40403	Volume Units	1 - 7
40404	Decimal (Calculated)	0 - 3
40405	Max Distance	(factory set)
40406	Full Distance	0 - 32,768 mm
40407	Empty Distance	0 - 32,768 mm
40436-40437	Tank Diameter	0 - 1,000,000 (mm)

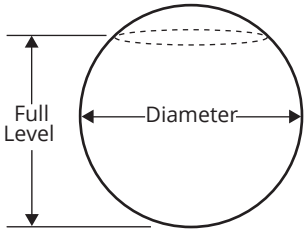

Application 7 - Pounds (Linear Scaling)

Register	Function	Value Range
40400	Device Address	1 to 247
40401	Units	1 = Feet, 2 = Inches, 3 = Meters
40402	Application Type	7
40403	Volume Units	--
40404	Decimal (Calculated)	0 - 3
40405	Max Distance	(factory set)
40406	Full Distance	0 - 32,768 mm
40407	Empty Distance	0 - 32,768 mm
40436-40437	Multiplier (linear scalar)	0 - 1,000,000 (1000 = 1.000)

Application 8 - N/A

Application 9 - Volume of Vertical Oval Tank

Register	Function	Value Range
40400	Device Address	1 to 247
40401	Units	--
40402	Application Type	9
40403	Volume Units	1 - 7
40404	Decimal (Calculated)	0 - 3
40405	Max Distance	(factory set)
40406	Full Distance	0 - 32,768 mm
40407	Empty Distance	0 - 32,768 mm
40436-40437	Tank Length	0 - 1,000,000 (mm)
40438-40439	Tank Depth	0 - 1,000,000 (mm)
40440-40441	Tank Width	0 - 1,000,000 (mm)

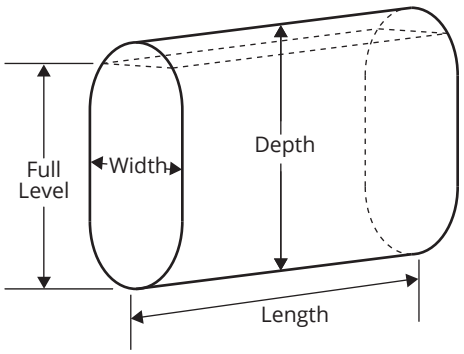

Tel: 1/888/525-7300 • Fax: 1/435/753-7490 • www.apgsensors.com • sales@apgsensors.com

Application 10 - Volume of Horizontal Oval Tank

Register	Function	Value Range
40400	Device Address	1 to 247
40401	Units	--
40402	Application Type	10
40403	Volume Units	1 - 7
40404	Decimal (Calculated)	0 - 3
40405	Max Distance	(factory set)
40406	Full Distance	0 - 32,768 mm
40407	Empty Distance	0 - 32,768 mm
40436-40437	Tank Length	0 - 1,000,000 (mm)
40438-40439	Tank Depth	0 - 1,000,000 (mm)
40440-40441	Tank Width	0 - 1,000,000 (mm)

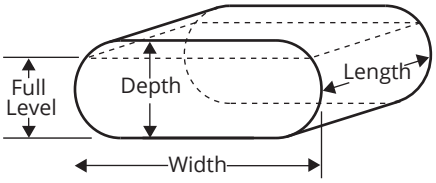

Application 11 - Strapping Chart (Polynomial Values)

Register	Function	Value Range
40400	Device Address	1 to 247
40401	Units	1 = Feet, 2 = Inches, 3 = Meters
40402	Application Type	11
40403	Volume Units	1 - 7
40404	Decimal (Calculated)	0 - 3
40405	Max Distance	(factory set)
40406	Full Distance	0 - 32,768 mm
40407	Empty Distance	0 - 32,768 mm
40436-40437	X^3 Coefficient	0 - 1,000,000
40438-40439	X^2 Coefficient	0 - 1,000,000
40440-40441	X^1 Coefficient	0 - 1,000,000
40442-40443	X^0 Coefficient	0 - 1,000,000

Chapter 4: Maintenance

• General Care

Your MPI level sensor is designed to be low maintenance. However, in general, you should:

- Periodically inspect your MPI to ensure the stem and floats are free of any heavy buildup that might impede the movement of the floats.
- Ensure the housing cover is snuggly secured. If the cover becomes damaged or is misplaced, order a replacement immediately.

• Repair and Returns

Should your MPI level sensor require service, please contact the factory via phone, email, or online chat. We will issue you a Return Material Authorization (RMA) number with instructions.

- Phone: 888-525-7300
- Email: sales@apgsensors.com
- Online chat at www.apgsensors.com

Please have your part number and serial number available. See Warranty and Warranty Restrictions for more information.

> ℹ IMPORTANT: All repairs and adjustments of the MPI level sensor must be made by the factory. Modifying, disassembling, or altering the MPI on site is strictly prohibited.

Chapter 5: Hazardous Location Installation and Certification

- **Intrinsically Safe Installation Drawing for Hazardous Locations**

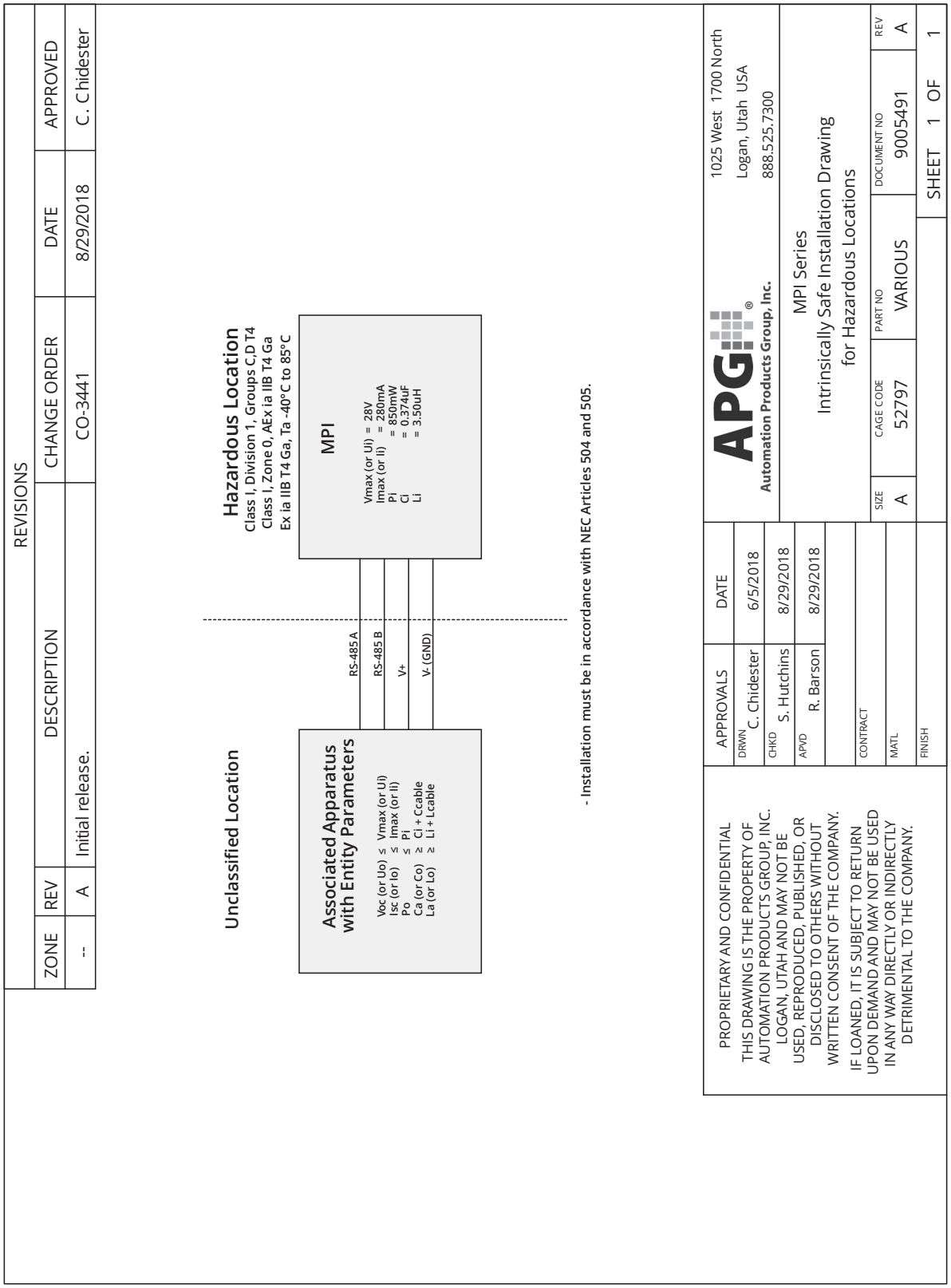

- **CSA Certificate of Compliance**

Certificate of Compliance

Certificate: 70219727 **Master Contract:** 237484

Project: 70219727 **Date Issued:** 2019-03-26

Issued to: **Automation Products Group Inc**
1025 West 1700 North
Logan, Utah 84321
USA
Attention: Karl Reid

The products listed below are eligible to bear the CSA Mark shown with adjacent indicators 'C' and 'US' for Canada and US or with adjacent indicator 'US' for US only or without either indicator for Canada only.

C US

Issued by: *Jigneshkumar Dabhi*
Jigneshkumar Dabhi

PRODUCTS
CLASS - C225804 - PROCESS CONTROL EQUIPMENT-Intrinsically Safe, Entity - For Hazardous Locations-
CLASS - C225884 - PROCESS CONTROL EQUIPMENT - Intrinsically Safe, Entity-- For Hazardous Locations - Certified to US Standards

Class I, Division 1, Groups C, D, T4; IP 65*

Class I, Zone 0, Ex/AEx ia, IIB, T4, Ga
Ex ia IIB, T4, Ga

MPI Vibration Sensors, rated 8-24 VDC, Imax = 280 mA; Tamb = -40°C to +85°C, Intrinsically Safe when installed per drawing 9005491

Entity Parameters: Ui= 28V, Ii= 280mA, Pi=0.850W, Li=3.50µH, Ci=0.374µF

*IP 65 is only for STEM Type E, G, R, F and T.

The MPI series utilizes a configurator style model coding system as defined below:
MPI-ABC-DE-FGHI-J-K-LMNO-PQ

DQD 507 Rev. 2018-11-12 Page 1

Tel: 1/888/525-7300 • Fax: 1/435/753-7490 • www.apgsensors.com • sales@apgsensors.com

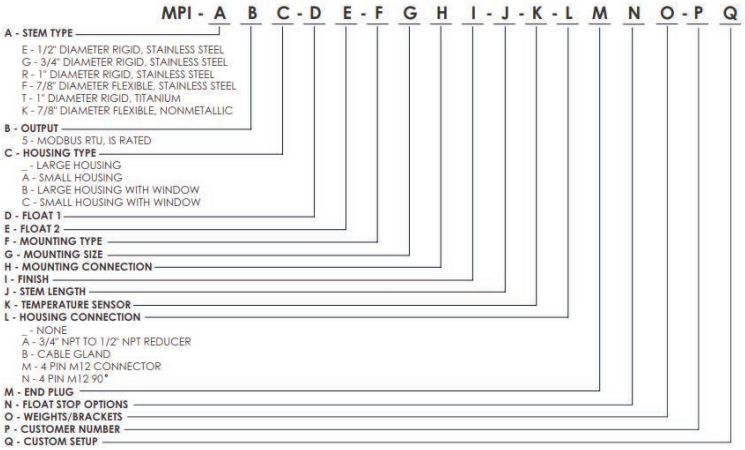

Conditions of Acceptability:

1. Under certain extreme circumstances, the non-metallic parts incorporated in the enclosure of this equipment may generate an ignition-capable level of electrostatic charge. Therefore the equipment shall not be installed in a location where the external conditions are conducive to the build-up of electrostatic charge on such surfaces. In addition, the equipment shall only be cleaned with a damp cloth.

2. The enclosure is manufactured from Aluminum. In rare cases, ignition sources due to impact and friction sparks could occur. This shall be considered during installation.

3. IP 65 is not a part of the hazardous location ratings and is tested separately.

APPLICABLE REQUIREMENTS

Standard	Description
C22.2 No. 60079-0:2019	Explosive atmospheres – Part 0: Equipment – General requirements
C22.2 No. 60079-11:2014	Explosive atmospheres — Part 11: Equipment protection by intrinsic safety "i"
C22.2 No. 61010-1-12	Safety Requirements for electrical equipment for measurement, control, and laboratory use – Part 1: General requirements
UL 61010-1:2012	UL Standard for Safety Electrical Equipment For Measurement, Control, and Laboratory Use; Part 1: General Requirements, 3rd. Ed.
UL 60079-0: 2013	Standard for Safety – Explosive Atmospheres – Part 0: Equipment – General Requirements, Ed. 6

Certificate: 70219727 **Master Contract:** 237484
Project: 70219727 **Date Issued:** 2019-03-26

UL 60079-11:2014	Standard for Safety – Explosive Atmospheres – Part 11: Equipment Protection by Intrinsic Safety "I", Ed. 6

MARKINGS

The manufacturer is required to apply the following markings:

- Products shall be marked with the markings specified by the particular product standard.
- Products certified for Canada shall have all Caution and Warning markings in both English and French.

Additional bilingual markings not covered by the product standard(s) may be required by the Authorities Having Jurisdiction. It is the responsibility of the manufacturer to provide and apply these additional markings, where applicable, in accordance with the requirements of those authorities.

The products listed are eligible to bear the CSA Mark shown with adjacent indicators 'C' and 'US' for Canada and US (indicating that products have been manufactured to the requirements of both Canadian and U.S. Standards) or with adjacent indicator 'US' for US only or without either indicator for Canada only.

1. Manufacturer's name or registered trade mark;
2. Model Number as in the PRODUCTS section, above;
3. Serial number S/N XXXXXX;
4. "Install per document 9005491"
5. Ambient Temperature Rating: as specified in the PRODUCTS section above;
6. DC Power Symbol as per Table 1, IEC 61010-1: ⎓
7. Hazardous Location Designation: As specified in PRODUCTS section above;
8. IP 65 (Only for STEM Type Type E, G, R, F and T).
9. Certificate number: CSA19CA70219727

Nameplate adhesive label material approval information:

1. The following markings are provided on a UL Recognized adhesive nameplate (also used previously on CSA certificate 2397437) manufactured by Zebra Technologies International, LLC, Material: Z-Ultimate 4000T, printed with a resin ribbon manufactured by Zebra Technologies International LLC, Material: 5100 Premium Resin Ribbon, at a maximum service temperature of 135°C or higher.

Tel: 1/888/525-7300 • Fax: 1/435/753-7490 • www.apgsensors.com • sales@apgsensors.com

- **IECEx Certificate of Conformity**

IECEx Certificate of Conformity

INTERNATIONAL ELECTROTECHNICAL COMMISSION
IEC Certification Scheme for Explosive Atmospheres

for rules and details of the IECEx Scheme visit www.iecex.com

Certificate No.: IECEx SIR 19.0026X

Issue No: 0

Certificate history:
Issue No. 0 (2019-03-22)

Status: **Current**

Page 1 of 3

Date of Issue: **2019-03-22**

Applicant: **Automation Products Group**
1025 West 1700 North
Logan
Utah 84321
United States of America

Equipment: **Magnetostrictive Level Sensor, MPI-ABC-DE-FGHI-J-K-LMNO-PQ**

Optional accessory:

Type of Protection: **Intrinsically Safe**

Marking:
Ex ia IIB T4 Ga
Ta = -40°C to +85°C

Approved for issue on behalf of the IECEx Certification Body: N Jones

Position: Technical Manager

Signature:
(for printed version)

Date:

1. This certificate and schedule may only be reproduced in full.
2. This certificate is not transferable and remains the property of the issuing body.
3. The Status and authenticity of this certificate may be verified by visiting the Official IECEx Website.

Certificate issued by:

SIRA Certification Service
CSA Group
Unit 6, Hawarden Industrial Park
Hawarden, Deeside, CH5 3US
United Kingdom

IECEx Certificate of Conformity

Certificate No: IECEx SIR 19.0026X

Issue No: 0

Date of Issue: **2019-03-22**

Manufacturer: **Automation Products Group**
1025 West 1700 North
Logan
Utah 84321
United States of America

Additional Manufacturing location(s):

This certificate is issued as verification that a sample(s), representative of production, was assessed and tested and found to comply with the IEC Standard list below and that the manufacturer's quality system, relating to the Ex products covered by this certificate, was assessed and found to comply with the IECEx Quality system requirements. This certificate is granted subject to the conditions as set out in IECEx Scheme Rules, IECEx 02 and Operational Documents as amended.

STANDARDS:

The apparatus and any acceptable variations to it specified in the schedule of this certificate and the identified documents, was found to comply with the following standards:

IEC 60079-0 : 2017 Explosive atmospheres - Part 0: Equipment - General requirements
Edition:7.0

IEC 60079-11 : 2011 Explosive atmospheres - Part 11: Equipment protection by intrinsic safety "i"
Edition:6.0

*This Certificate **does not** indicate compliance with electrical safety and performance requirements other than those expressly included in the Standards listed above.*

TEST & ASSESSMENT REPORTS:

A sample(s) of the equipment listed has successfully met the examination and test requirements as recorded in

Test Report:

GB/SIR/ExTR19.0088/00

Quality Assessment Report:

NL/DEK/QAR13.0027/03

Tel: 1/888/525-7300 • Fax: 1/435/753-7490 • www.apgsensors.com • sales@apgsensors.com

IECEx Certificate of Conformity

Certificate No:	IECEx SIR 19.0026X	Issue No: 0
Date of Issue:	**2019-03-22**	Page 3 of 3

Schedule

EQUIPMENT:

Equipment and systems covered by this certificate are as follows:

The MPI Series Magnetostrictive Level sensor is used for level readings of liquid level measurement applications. The MPI transmits an electrical pulse down a ferromagnetic wire which, when encountering a magnetic field, causes a torsion on the wire, resulting in part of the transmitted pulse being reflected back up the wire. This reflected pulse is then picked up by a coil input into the circuit. The on board processor calculates the distance based on the time of flight of the return echo. An on board temperature sensor, as well as temperature sensors in the stem, allow for temperature compensation. This product is comprised of an aluminium enclosure that houses a PCA and internal wiring, and a stem, which houses the ferromagnetic wire and the digital temperature sensors.

Refer to the Annexe for Entity parameters and coding.

SPECIFIC CONDITIONS OF USE: YES as shown below:

1. Under certain extreme circumstances, the non-metallic parts incorporated in the enclosure of this equipment may generate an ignition-capable level of electrostatic charge. Therefore the equipment shall not be installed in a location where the external conditions are conducive to the build-up of electrostatic charge on such surfaces. In addition, the equipment shall only be cleaned with a damp cloth.
2. The enclosure is manufactured from Aluminium. In rare cases, ignition sources due to impact and friction sparks could occur. This shall be considered during installation.

Annex:

IECEx SIR 19.0026X Issue 0 Annexe.pdf

- **EU Declaration of Conformity**

EU *Declaration of Conformity*

Manufacturer's Name: Automation Products Group Inc.

Address: 1025 West 1700 North
Logan, UT 84321

Tel: (435) 753-7300
Fax: (435) 753-7490
Email: sales@apgsensors.com
Web: www.apgsensors.com

Declares that the product:

Product Name: MPI Series Magnetostrictive Level Sensor

Conforms to:

EMC Directive 2014/30/EU

ATEX Directive 2014/34/EU

- EC Type Examination Certificate: Sira 19ATEX2072X

Sira 0518

Sira Certifcation Service, Rake Lane, Eccleston, Chester, CH4 9JN, England

Description of Equipment or Protective System:

The equipment is used for liquid level measurement applications. It measures the liquid level and transmits a reading through a Modbus RTU interface.

Conforms to the following Standards:

EN IEC 60079-0:2018, EN IEC 60079-11:2012, EN 61326-1:2013,
EN 61326-2-3:2013, EN 55011:2015

Markings: ATEX: II 1G Ex ia IIB T4 Ga (Ta = -40°C to +85°C)

Supplementary Information:

The product described in this Declaration of Conformity complies with the Applicable European Directives and relevant sections of the Applicable International Standards. The signature on this document authorizes the distinctive European mark to be applied to the equipment described.

Authorized Signature: Bob Barson

Bob Barson, Product Line Manager

Automation Products Group, Inc.
Tel: 1/888/525-7300 • Fax: 1/435/753-7490 • www.apgsensors.com • sales@apgsensors.com