BA01816D/06/EN/03.20
71490474
2020-09-01

Valid as of version
01.05.zz (Device firmware)

Operating Instructions
Proline Promass A 300 HART

Coriolis flowmeter

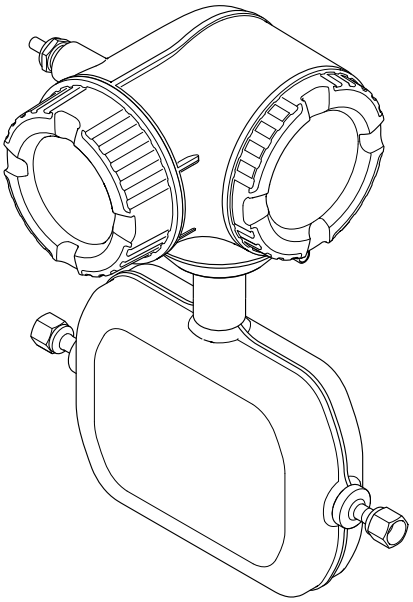

Endress+Hauser
People for Process Automation

- Make sure the document is stored in a safe place such that it is always available when working on or with the device.
- To avoid danger to individuals or the facility, read the "Basic safety instructions" section carefully, as well as all other safety instructions in the document that are specific to working procedures.
- The manufacturer reserves the right to modify technical data without prior notice. Your Endress+Hauser Sales Center will supply you with current information and updates to these instructions.

Table of contents

1 About this document 6
1.1 Document function 6
1.2 Symbols 6
1.2.1 Safety symbols 6
1.2.2 Electrical symbols 6
1.2.3 Communication symbols 6
1.2.4 Tool symbols 7
1.2.5 Symbols for certain types of information 7
1.2.6 Symbols in graphics 7
1.3 Documentation 8
1.3.1 Standard documentation 8
1.3.2 Supplementary device-dependent documentation 8
1.4 Registered trademarks 8

2 Safety instructions 10
2.1 Requirements for the personnel 10
2.2 Designated use 10
2.3 Workplace safety 11
2.4 Operational safety 11
2.5 Product safety 12
2.6 IT security 12
2.7 Device-specific IT security 12
2.7.1 Protecting access via hardware write protection 12
2.7.2 Protecting access via a password 13
2.7.3 Access via Web server 13
2.7.4 Access via OPC-UA 14
2.7.5 Access via service interface (CDI-RJ45) 14

3 Product description 15
3.1 Product design 15

4 Incoming acceptance and product identification 16
4.1 Incoming acceptance 16
4.2 Product identification 16
4.2.1 Transmitter nameplate 17
4.2.2 Sensor nameplate 18
4.2.3 Symbols on measuring device 19

5 Storage and transport 20
5.1 Storage conditions 20
5.2 Transporting the product 20
5.2.1 Measuring devices without lifting lugs 20
5.2.2 Measuring devices with lifting lugs . . 21
5.2.3 Transporting with a fork lift 21
5.3 Packaging disposal 21

6 Installation 22
6.1 Installation conditions 22
6.1.1 Mounting position 22
6.1.2 Environmental and process requirements 24
6.1.3 Special mounting instructions 25
6.2 Mounting the measuring device 28
6.2.1 Required tools 28
6.2.2 Preparing the measuring device 28
6.2.3 Mounting the measuring device 29
6.2.4 Turning the transmitter housing 29
6.2.5 Turning the display module 29
6.3 Post-installation check 30

7 Electrical connection 31
7.1 Connection conditions 31
7.1.1 Required tools 31
7.1.2 Requirements for connecting cable . . . 31
7.1.3 Terminal assignment 34
7.1.4 Preparing the measuring device 34
7.2 Connecting the measuring device 34
7.2.1 Connecting the transmitter 34
7.2.2 Connecting the remote display and operating module DKX001 37
7.3 Ensuring potential equalization 37
7.3.1 Requirements 37
7.4 Special connection instructions 38
7.4.1 Connection examples 38
7.5 Ensuring the degree of protection 42
7.6 Post-connection check 42

8 Operation options 43
8.1 Overview of operation options 43
8.2 Structure and function of the operating menu 44
8.2.1 Structure of the operating menu 44
8.2.2 Operating philosophy 45
8.3 Access to the operating menu via the local display 46
8.3.1 Operational display 46
8.3.2 Navigation view 47
8.3.3 Editing view 49
8.3.4 Operating elements 51
8.3.5 Opening the context menu 52
8.3.6 Navigating and selecting from list . . . 53
8.3.7 Calling the parameter directly 53
8.3.8 Calling up help text 54
8.3.9 Changing the parameters 54
8.3.10 User roles and related access authorization 55
8.3.11 Disabling write protection via access code 55
8.3.12 Enabling and disabling the keypad lock 56

8.4 Access to the operating menu via the Web browser . . . 56
8.4.1 Function range . . . 56
8.4.2 Prerequisites . . . 57
8.4.3 Establishing a connection . . . 58
8.4.4 Logging on . . . 60
8.4.5 User interface . . . 61
8.4.6 Disabling the Web server . . . 62
8.4.7 Logging out . . . 62
8.5 Access to the operating menu via the operating tool . . . 63
8.5.1 Connecting the operating tool . . . 63
8.5.2 Field Xpert SFX350, SFX370 . . . 66
8.5.3 FieldCare . . . 66
8.5.4 DeviceCare . . . 68
8.5.5 AMS Device Manager . . . 68
8.5.6 SIMATIC PDM . . . 69
8.5.7 Field Communicator 475 . . . 69

9 System integration . . . 70

9.1 Overview of device description files . . . 70
9.1.1 Current version data for the device . . . 70
9.1.2 Operating tools . . . 70
9.2 Measured variables via HART protocol . . . 71
9.2.1 Device variables . . . 73
9.3 Other settings . . . 74

10 Commissioning . . . 76

10.1 Function check . . . 76
10.2 Switching on the measuring device . . . 76
10.3 Setting the operating language . . . 76
10.4 Configuring the measuring device . . . 76
10.4.1 Defining the tag name . . . 78
10.4.2 Setting the system units . . . 78
10.4.3 Selecting and setting the medium . . . 81
10.4.4 Displaying the I/O configuration . . . 82
10.4.5 Configuring the current input . . . 83
10.4.6 Configuring the status input . . . 85
10.4.7 Configuring the current output . . . 85
10.4.8 Configuring the pulse/frequency/ switch output . . . 89
10.4.9 Configuring the relay output . . . 96
10.4.10 Configuring the double pulse output . . . 98
10.4.11 Configuring the local display . . . 99
10.4.12 Configuring the low flow cut off . . . 103
10.4.13 Configuring the partial filled pipe detection . . . 104
10.5 Advanced settings . . . 105
10.5.1 Using the parameter to enter the access code . . . 106
10.5.2 Calculated values . . . 106
10.5.3 Carrying out a sensor adjustment . . . 107
10.5.4 Configuring the totalizer . . . 108
10.5.5 Carrying out additional display configurations . . . 110
10.5.6 WLAN configuration . . . 113
10.5.7 Configuration management . . . 114
10.5.8 Using parameters for device administration . . . 116
10.6 Simulation . . . 117
10.7 Protecting settings from unauthorized access . . . 120
10.7.1 Write protection via access code . . . 120
10.7.2 Write protection via write protection switch . . . 122

11 Operation . . . 123

11.1 Reading the device locking status . . . 123
11.2 Adjusting the operating language . . . 123
11.3 Configuring the display . . . 123
11.4 Reading measured values . . . 123
11.4.1 "Measured variables" submenu . . . 124
11.4.2 "Totalizer" submenu . . . 125
11.4.3 "Input values" submenu . . . 126
11.4.4 Output values . . . 127
11.5 Adapting the measuring device to the process conditions . . . 129
11.6 Performing a totalizer reset . . . 129
11.6.1 Function scope of the "Control Totalizer" parameter . . . 130
11.6.2 Function scope of the "Reset all totalizers" parameter . . . 130
11.7 Showing data logging . . . 130

12 Diagnostics and troubleshooting . . . 135

12.1 General troubleshooting . . . 135
12.2 Diagnostic information via light emitting diodes . . . 137
12.2.1 Transmitter . . . 137
12.3 Diagnostic information on local display . . . 139
12.3.1 Diagnostic message . . . 139
12.3.2 Calling up remedial measures . . . 141
12.4 Diagnostic information in the Web browser . . . 141
12.4.1 Diagnostic options . . . 141
12.4.2 Calling up remedy information . . . 142
12.5 Diagnostic information in FieldCare or DeviceCare . . . 143
12.5.1 Diagnostic options . . . 143
12.5.2 Calling up remedy information . . . 144
12.6 Adapting the diagnostic information . . . 144
12.6.1 Adapting the diagnostic behavior . . . 144
12.6.2 Adapting the status signal . . . 144
12.7 Overview of diagnostic information . . . 145
12.8 Pending diagnostic events . . . 149
12.9 Diagnostic list . . . 150
12.10 Event logbook . . . 151
12.10.1 Reading out the event logbook . . . 151
12.10.2 Filtering the event logbook . . . 152
12.10.3 Overview of information events . . . 152
12.11 Resetting the measuring device . . . 153
12.11.1 Function scope of the "Device reset" parameter . . . 154
12.12 Device information . . . 154
12.13 Firmware history . . . 156
12.14 Device history and compatibility . . . 156

13 Maintenance 157
13.1 Maintenance tasks 157
13.1.1 Exterior cleaning 157
13.1.2 Interior cleaning 157
13.2 Measuring and test equipment 157
13.3 Endress+Hauser services 157

14 Repair 158
14.1 General notes 158
14.1.1 Repair and conversion concept 158
14.1.2 Notes for repair and conversion 158
14.2 Spare parts 158
14.3 Endress+Hauser services 158
14.4 Return 158
14.5 Disposal 159
14.5.1 Removing the measuring device 159
14.5.2 Disposing of the measuring device . . 159

15 Accessories 160
15.1 Device-specific accessories 160
15.1.1 For the transmitter 160
15.1.2 For the sensor 161
15.2 Communication-specific accessories 161
15.3 Service-specific accessories 162
15.4 System components 162

16 Technical data 163
16.1 Application 163
16.2 Function and system design 163
16.3 Input 164
16.4 Output 167
16.5 Power supply 173
16.6 Performance characteristics 174
16.7 Installation 178
16.8 Environment 178
16.9 Process 179
16.10 Mechanical construction 181
16.11 Human interface 185
16.12 Certificates and approvals 189
16.13 Application packages 192
16.14 Accessories 193
16.15 Supplementary documentation 193

Index 196

1 About this document

1.1 Document function

These Operating Instructions contain all the information that is required in various phases of the life cycle of the device: from product identification, incoming acceptance and storage, to mounting, connection, operation and commissioning through to troubleshooting, maintenance and disposal.

1.2 Symbols

1.2.1 Safety symbols

⚠ DANGER
This symbol alerts you to a dangerous situation. Failure to avoid this situation will result in serious or fatal injury.

⚠ WARNING
This symbol alerts you to a dangerous situation. Failure to avoid this situation can result in serious or fatal injury.

⚠ CAUTION
This symbol alerts you to a dangerous situation. Failure to avoid this situation can result in minor or medium injury.

NOTICE
This symbol contains information on procedures and other facts which do not result in personal injury.

1.2.2 Electrical symbols

Symbol	Meaning
⎓	Direct current
∼	Alternating current
≂	Direct current and alternating current
⏚	**Ground connection** A grounded terminal which, as far as the operator is concerned, is grounded via a grounding system.
⏚	**Protective Earth (PE)** A terminal which must be connected to ground prior to establishing any other connections. The ground terminals are situated inside and outside the device: ▪ Inner ground terminal: Connects the protectiv earth to the mains supply. ▪ Outer ground terminal: Connects the device to the plant grounding system.

1.2.3 Communication symbols

Symbol	Meaning
📶	**Wireless Local Area Network (WLAN)** Communication via a wireless, local network.
●	**LED** Light emitting diode is off.

Symbol	Meaning
	LED Light emitting diode is on.
	LED Light emitting diode is flashing.

1.2.4 Tool symbols

Symbol	Meaning
	Flat blade screwdriver
	Allen key
	Open-ended wrench

1.2.5 Symbols for certain types of information

Symbol	Meaning
	Permitted Procedures, processes or actions that are permitted.
	Preferred Procedures, processes or actions that are preferred.
	Forbidden Procedures, processes or actions that are forbidden.
	Tip Indicates additional information.
	Reference to documentation.
	Reference to page.
	Reference to graphic.
▶	Notice or individual step to be observed.
1., 2., 3....	Series of steps.
	Result of a step.
	Help in the event of a problem.
	Visual inspection.

1.2.6 Symbols in graphics

Symbol	Meaning
1, 2, 3, ...	Item numbers
1., 2., 3., ...	Series of steps
A, B, C, ...	Views
A-A, B-B, C-C, ...	Sections
EX	Hazardous area

Symbol	Meaning
	Safe area (non-hazardous area)
	Flow direction

1.3 Documentation

For an overview of the scope of the associated Technical Documentation, refer to the following:
- *W@M Device Viewer* (www.endress.com/deviceviewer): Enter the serial number from nameplate
- *Endress+Hauser Operations App*: Enter the serial number from the nameplate or scan the 2D matrix code (QR code) on the nameplate

Detailed list of the individual documents along with the documentation code → 193

1.3.1 Standard documentation

Document type	Purpose and content of the document
Technical Information	**Planning aid for your device** The document contains all the technical data on the device and provides an overview of the accessories and other products that can be ordered for the device.
Sensor Brief Operating Instructions	**Guides you quickly to the 1st measured value - Part 1** The Sensor Brief Operating Instructions are aimed at specialists with responsibility for installing the measuring device. ▪ Incoming acceptance and product identification ▪ Storage and transport ▪ Installation
Transmitter Brief Operating Instructions	**Guides you quickly to the 1st measured value - Part 2** The Transmitter Brief Operating Instructions are aimed at specialists with responsibility for commissioning, configuring and parameterizing the measuring device (until the first measured value). ▪ Product description ▪ Installation ▪ Electrical connection ▪ Operation options ▪ System integration ▪ Commissioning ▪ Diagnostic information
Description of Device Parameters	**Reference for your parameters** The document provides a detailed explanation of each individual parameter in the Expert operating menu. The description is aimed at those who work with the device over the entire life cycle and perform specific configurations.

1.3.2 Supplementary device-dependent documentation

Additional documents are supplied depending on the device version ordered: Always comply strictly with the instructions in the supplementary documentation. The supplementary documentation is an integral part of the device documentation.

1.4 Registered trademarks

HART®
Registered trademark of the FieldComm Group, Austin, Texas, USA

TRI-CLAMP®
Registered trademark of Ladish & Co., Inc., Kenosha, USA

2 Safety instructions

2.1 Requirements for the personnel

The personnel for installation, commissioning, diagnostics and maintenance must fulfill the following requirements:
- Trained, qualified specialists must have a relevant qualification for this specific function and task.
- Are authorized by the plant owner/operator.
- Are familiar with federal/national regulations.
- Before starting work, read and understand the instructions in the manual and supplementary documentation as well as the certificates (depending on the application).
- Follow instructions and comply with basic conditions.

The operating personnel must fulfill the following requirements:
- Are instructed and authorized according to the requirements of the task by the facility's owner-operator.
- Follow the instructions in this manual.

2.2 Designated use

Application and media
The measuring device described in this manual is intended only for the flow measurement of liquids and gases.

Depending on the version ordered, the measuring device can also measure potentially explosive, flammable, poisonous and oxidizing media.

Measuring devices for use in hazardous areas, in hygienic applications or where there is an increased risk due to process pressure, are labeled accordingly on the nameplate.

To ensure that the measuring device remains in proper condition for the operation time:
- Keep within the specified pressure and temperature range.
- Only use the measuring device in full compliance with the data on the nameplate and the general conditions listed in the Operating Instructions and supplementary documentation.
- Based on the nameplate, check whether the ordered device is permitted for the intended use in the hazardous area (e.g. explosion protection, pressure vessel safety).
- Use the measuring device only for media to which the process-wetted materials are sufficiently resistant.
- If the ambient temperature of the measuring device is outside the atmospheric temperature, it is absolutely essential to comply with the relevant basic conditions as specified in the device documentation→ 🗎 8.
- Protect the measuring device permanently against corrosion from environmental influences.

Incorrect use
Non-designated use can compromise safety. The manufacturer is not liable for damage caused by improper or non-designated use.

⚠ WARNING
Danger of breakage due to corrosive or abrasive fluids and ambient conditions!
- Verify the compatibility of the process fluid with the sensor material.
- Ensure the resistance of all fluid-wetted materials in the process.
- Keep within the specified pressure and temperature range.

NOTICE

Verification for borderline cases:

- For special fluids and fluids for cleaning, Endress+Hauser is glad to provide assistance in verifying the corrosion resistance of fluid-wetted materials, but does not accept any warranty or liability as minute changes in the temperature, concentration or level of contamination in the process can alter the corrosion resistance properties.

Residual risks

WARNING

The electronics and the medium may cause the surfaces to heat up. This presents a burn hazard!

- For elevated fluid temperatures, ensure protection against contact to prevent burns.

WARNING

Danger of housing breaking due to measuring tube breakage!

If a measuring tube ruptures, the pressure inside the sensor housing will rise according to the operating process pressure.

- Use a rupture disk.

WARNING

Danger from medium escaping!

For device versions with a rupture disk: medium escaping under pressure can cause injury or material damage.

- Take precautions to prevent injury and material damage if the rupture disk is actuated.

2.3 Workplace safety

For work on and with the device:

- Wear the required personal protective equipment according to federal/national regulations.

For welding work on the piping:

- Do not ground the welding unit via the measuring device.

If working on and with the device with wet hands:

- Due to the increased risk of electric shock, gloves must be worn.

2.4 Operational safety

Risk of injury.

- Operate the device in proper technical condition and fail-safe condition only.
- The operator is responsible for interference-free operation of the device.

Conversions to the device

Unauthorized modifications to the device are not permitted and can lead to unforeseeable dangers.

- If, despite this, modifications are required, consult with Endress+Hauser.

Repair

To ensure continued operational safety and reliability,

- Carry out repairs on the device only if they are expressly permitted.
- Observe federal/national regulations pertaining to repair of an electrical device.
- Use original spare parts and accessories from Endress+Hauser only.

2.5 Product safety

This measuring device is designed in accordance with good engineering practice to meet state-of-the-art safety requirements, has been tested, and left the factory in a condition in which it is safe to operate.

It meets general safety standards and legal requirements. It also complies with the EU directives listed in the device-specific EU Declaration of Conformity. Endress+Hauser confirms this by affixing the CE mark to the device.

2.6 IT security

Our warranty is valid only if the device is installed and used as described in the Operating Instructions. The device is equipped with security mechanisms to protect it against any inadvertent changes to the settings.

IT security measures, which provide additional protection for the device and associated data transfer, must be implemented by the operators themselves in line with their security standards.

2.7 Device-specific IT security

The device offers a range of specific functions to support protective measures on the operator's side. These functions can be configured by the user and guarantee greater in-operation safety if used correctly. An overview of the most important functions is provided in the following section.

Function/interface	Factory setting	Recommendation
Write protection via hardware write protection switch → 🗎 12	Not enabled.	On an individual basis following risk assessment.
Access code (also applies for Web server login or FieldCare connection) → 🗎 13	Not enabled (0000).	Assign a customized access code during commissioning.
WLAN (order option in display module)	Enabled.	On an individual basis following risk assessment.
WLAN security mode	Enabled (WPA2-PSK)	Do not change.
WLAN passphrase (password) → 🗎 13	Serial number	Assign an individual WLAN passphrase during commissioning.
WLAN mode	Access Point	On an individual basis following risk assessment.
Web server→ 🗎 13	Enabled.	On an individual basis following risk assessment.
CDI-RJ45 service interface → 🗎 14	–	On an individual basis following risk assessment.

2.7.1 Protecting access via hardware write protection

Write access to the device parameters via the local display, Web browser or operating tool (e.g. FieldCare, DeviceCare) can be disabled via a write protection switch (DIP switch on the motherboard). When hardware write protection is enabled, only read access to the parameters is possible.

Hardware write protection is disabled when the device is delivered → 🗎 122.

2.7.2 Protecting access via a password

Different passwords are available to protect write access to the device parameters or access to the device via the WLAN interface.

- User-specific access code
  Protect write access to the device parameters via the local display, Web browser or operating tool (e.g. FieldCare, DeviceCare). Access authorization is clearly regulated through the use of a user-specific access code.
- WLAN passphrase
  The network key protects a connection between an operating unit (e.g. notebook or tablet) and the device via the WLAN interface which can be ordered as an option.
- Infrastructure mode
  When the device is operated in infrastructure mode, the WLAN passphrase corresponds to the WLAN passphrase configured on the operator side.

User-specific access code

Write access to the device parameters via the local display, Web browser or operating tool (e.g. FieldCare, DeviceCare) can be protected by the modifiable, user-specific access code (→ 🗎 120).

When the device is delivered, the device does not have an access code and is equivalent to *0000* (open).

WLAN passphrase: Operation as WLAN access point

A connection between an operating unit (e.g. notebook or tablet) and the device via the WLAN interface (→ 🗎 65), which can be ordered as an optional extra, is protected by the network key. The WLAN authentication of the network key complies with the IEEE 802.11 standard.

When the device is delivered, the network key is pre-defined depending on the device. It can be changed via the **WLAN settings** submenu in the **WLAN passphrase** parameter (→ 🗎 114).

Infrastructure mode

A connection between the device and WLAN access point is protected by means of an SSID and passphrase on the system side. Please contact the relevant system administrator for access.

General notes on the use of passwords

- The access code and network key supplied with the device should be changed during commissioning.
- Follow the general rules for generating a secure password when defining and managing the access code or network key.
- The user is responsible for the management and careful handling of the access code and network key.
- For information on configuring the access code or on what to do if you lose the password, see the "Write protection via access code" section → 🗎 120

2.7.3 Access via Web server

The device can be operated and configured via a Web browser with the integrated Web server (→ 🗎 56). The connection is via the service interface (CDI-RJ45) or the WLAN interface.

The Web server is enabled when the device is delivered. The Web server can be disabled if necessary (e.g. after commissioning) via the **Web server functionality** parameter.

The device and status information can be hidden on the login page. This prevents unauthorized access to the information.

For detailed information on device parameters, see:
The "Description of Device Parameters" document → 194.

2.7.4 Access via OPC-UA

The device can communicate with OPC UA clients using the "OPC UA Server" application package.

The OPC UA server integrated in the device can be accessed via the WLAN access point using the WLAN interface - which can be ordered as an optional extra - or the service interface (CDI- RJ45) via Ethernet network. Access rights and authorization as per separate configuration.

The following Security Modes are supported as per the OPC UA Specification (IEC 62541):
- None
- Basic128Rsa15 – signed
- Basic128Rsa15 – signed and encrypted

2.7.5 Access via service interface (CDI-RJ45)

The device can be connected to a network via the service interface (CDI-RJ45). Device-specific functions guarantee the secure operation of the device in a network.

The use of relevant industrial standards and guidelines that have been defined by national and international safety committees, such as IEC/ISA62443 or the IEEE, is recommended. This includes organizational security measures such as the assignment of access authorization as well as technical measures such as network segmentation.

Transmitters with an Ex de approval may not be connected via the service interface (CDI-RJ45)!

Order code for "Approval transmitter + sensor", options (Ex de): BA, BB, C1, C2, GA, GB, MA, MB, NA, NB

3 Product description

The device consists of a transmitter and a sensor.

The device is available as a compact version:
The transmitter and sensor form a mechanical unit.

3.1 Product design

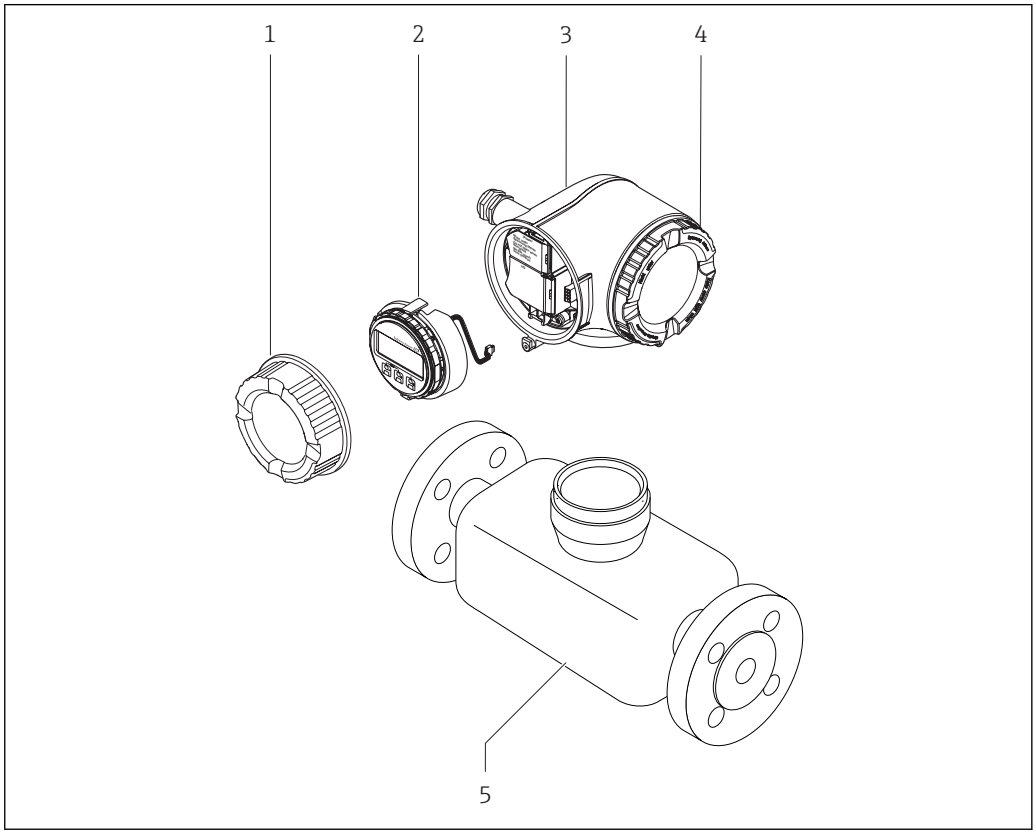

1 Important components of a measuring device

1 Connection compartment cover
2 Display module
3 Transmitter housing
4 Electronics compartment cover
5 Sensor

4 Incoming acceptance and product identification

4.1 Incoming acceptance

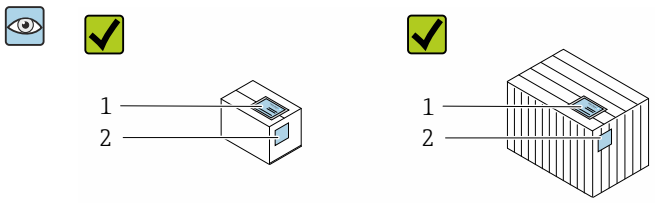

Are the order codes on the delivery note (1) and the product sticker (2) identical?

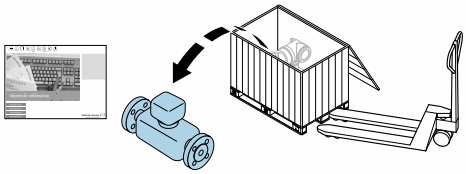

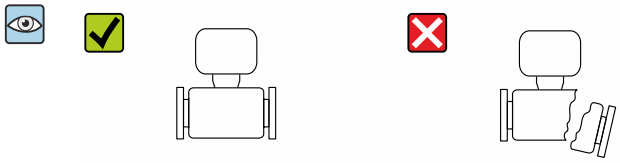

Are the goods undamaged?

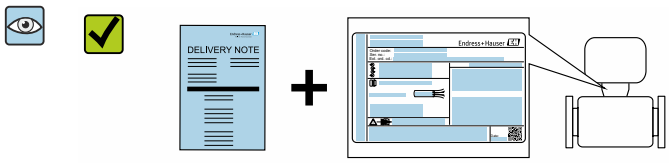

Do the nameplate data match the ordering information on the delivery note?

Is the envelope present with accompanying documents?

- If one of the conditions is not satisfied, contact your Endress+Hauser Sales Center.
- Depending on the device version, the CD-ROM might not be part of the delivery! The Technical Documentation is available via the Internet or via the *Endress+Hauser Operations App*, see the "Product identification" section → 17.

4.2 Product identification

The following options are available for identification of the device:
- Nameplate specifications
- Order code with breakdown of the device features on the delivery note
- Enter serial numbers from nameplates in the *W@M Device Viewer* (www.endress.com/deviceviewer): All information about the device is displayed.
- Enter the serial number from nameplates in the *Endress+Hauser Operations App* or scan the 2-D matrix code (QR code) on the nameplate using the *Endress+Hauser Operations App*: All information about the device is displayed.

For an overview of the scope of the associated Technical Documentation, refer to the following:

- The "Additional standard documentation on the device"→ 📄 8 and "Supplementary device-dependent documentation"→ 📄 8 sections
- The *W@M Device Viewer*: enter the serial number from the nameplate (www.endress.com/deviceviewer)
- The *Endress+Hauser Operations App*: Enter the serial number from the nameplate or scan the 2-D matrix code (QR code) on the nameplate.

4.2.1 Transmitter nameplate

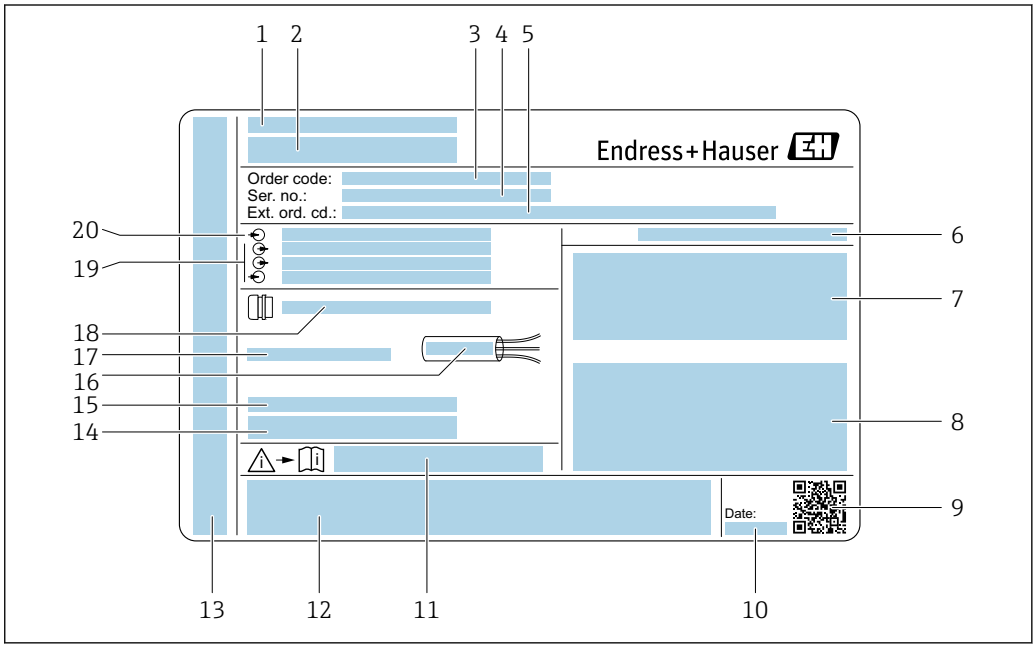

2 Example of a transmitter nameplate

1 *Manufacturing location*
2 *Name of the transmitter*
3 *Order code*
4 *Serial number (ser. no.)*
5 *Extended order code (Ext. ord. cd.)*
6 *Degree of protection*
7 *Space for approvals: use in hazardous areas*
8 *Electrical connection data: available inputs and outputs*
9 *2-D matrix code*
10 *Manufacturing date: year-month*
11 *Document number of safety-related supplementary documentation*
12 *Space for approvals and certificates: e.g. CE mark, C-Tick*
13 *Space for degree of protection of connection and electronics compartment when used in hazardous areas*
14 *Firmware version (FW) and device revision (Dev.Rev.) from the factory*
15 *Space for additional information in the case of special products*
16 *Permitted temperature range for cable*
17 *Permitted ambient temperature (T_a)*
18 *Information on cable gland*
19 *Available inputs and outputs, supply voltage*
20 *Electrical connection data: supply voltage*

4.2.2 Sensor nameplate

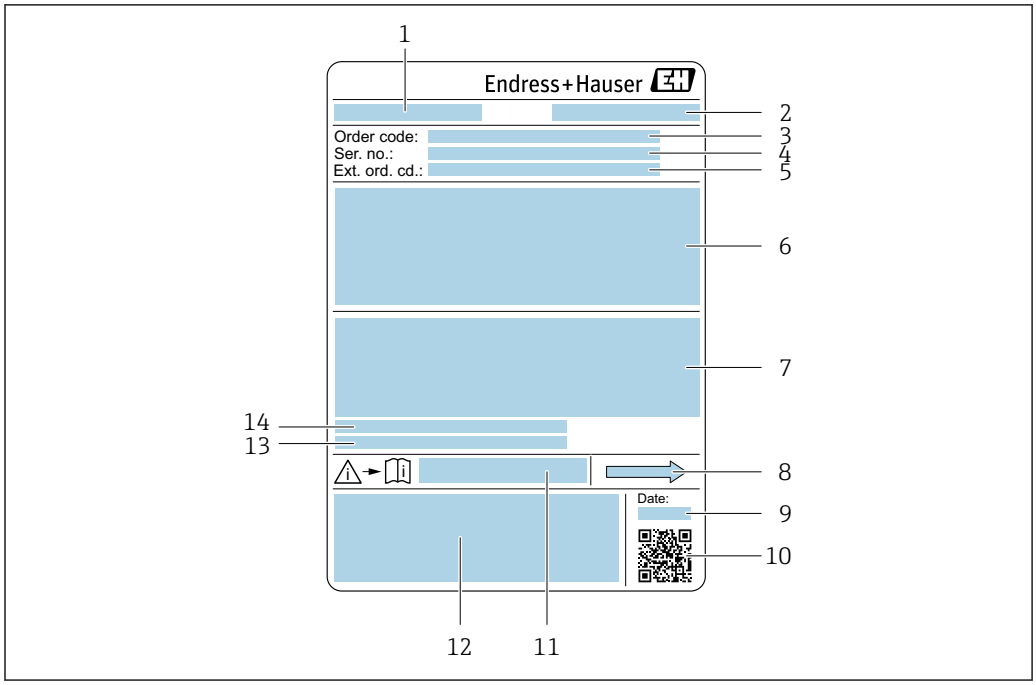

3 *Example of a sensor nameplate*

1 *Name of the sensor*
2 *Manufacturing location*
3 *Order code*
4 *Serial number (ser. no.)*
5 *Extended order code (Ext. ord. cd.)*
6 *Nominal diameter of the sensor; flange nominal diameter/nominal pressure; sensor test pressure; medium temperature range; material of measuring tube and manifold; sensor-specific information: e.g. pressure range of sensor housing, wide-range density specification (special density calibration)*
7 *Approval information for explosion protection, Pressure Equipment Directive and degree of protection*
8 *Flow direction*
9 *Manufacturing date: year-month*
10 *2-D matrix code*
11 *Document number of safety-related supplementary documentation*
12 *CE mark, C-Tick*
13 *Surface roughness*
14 *Permitted ambient temperature (T_a)*

Order code
The measuring device is reordered using the order code.

Extended order code
- The device type (product root) and basic specifications (mandatory features) are always listed.
- Of the optional specifications (optional features), only the safety and approval-related specifications are listed (e.g. LA). If other optional specifications are also ordered, these are indicated collectively using the # placeholder symbol (e.g. #LA#).
- If the ordered optional specifications do not include any safety and approval-related specifications, they are indicated by the + placeholder symbol (e.g. XXXXXX-ABCDE +).

4.2.3 Symbols on measuring device

Symbol	Meaning
⚠	**WARNING!** This symbol alerts you to a dangerous situation. Failure to avoid this situation can result in serious or fatal injury.
📖	**Reference to documentation** Refers to the corresponding device documentation.
⏚	**Protective ground connection** A terminal which must be connected to ground prior to establishing any other connections.

5 Storage and transport

5.1 Storage conditions

Observe the following notes for storage:
- ▶ Store in the original packaging to ensure protection from shock.
- ▶ Do not remove protective covers or protective caps installed on process connections. They prevent mechanical damage to the sealing surfaces and contamination in the measuring tube.
- ▶ Protect from direct sunlight to avoid unacceptably high surface temperatures.
- ▶ Store in a dry and dust-free place.
- ▶ Do not store outdoors.

Storage temperature→ 178

5.2 Transporting the product

Transport the measuring device to the measuring point in the original packaging.

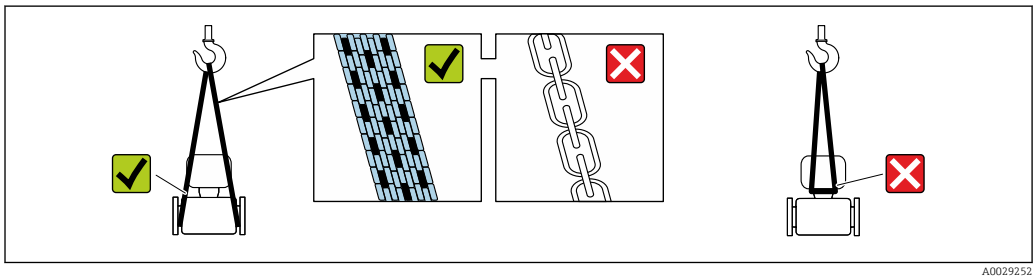

A0029252

Do not remove protective covers or caps installed on process connections. They prevent mechanical damage to the sealing surfaces and contamination in the measuring tube.

5.2.1 Measuring devices without lifting lugs

WARNING

Center of gravity of the measuring device is higher than the suspension points of the webbing slings.

Risk of injury if the measuring device slips.
- ▶ Secure the measuring device against slipping or turning.
- ▶ Observe the weight specified on the packaging (stick-on label).

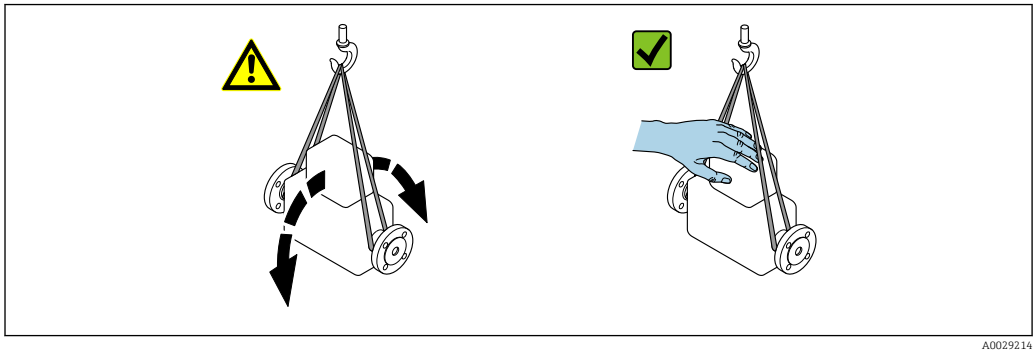

A0029214

5.2.2 Measuring devices with lifting lugs

⚠ CAUTION

Special transportation instructions for devices with lifting lugs

- ▶ Only use the lifting lugs fitted on the device or flanges to transport the device.
- ▶ The device must always be secured at two lifting lugs at least.

5.2.3 Transporting with a fork lift

If transporting in wood crates, the floor structure enables the crates to be lifted lengthwise or at both sides using a forklift.

5.3 Packaging disposal

All packaging materials are environmentally friendly and 100 % recyclable:

- Outer packaging of device
  Polymer stretch wrap that complies with EU Directive 2002/95/EC (RoHS)
- Packaging
  - Wooden crate treated in accordance with ISPM 15 standard, confirmed by IPPC logo
  - Cardboard box in accordance with European packaging guideline 94/62EC, recyclability confirmed by Resy symbol
- Carrying and securing materials
  - Disposable plastic pallet
  - Plastic straps
  - Plastic adhesive strips
- Filler material
  Paper pads

6 Installation

6.1 Installation conditions

6.1.1 Mounting position

Mounting location

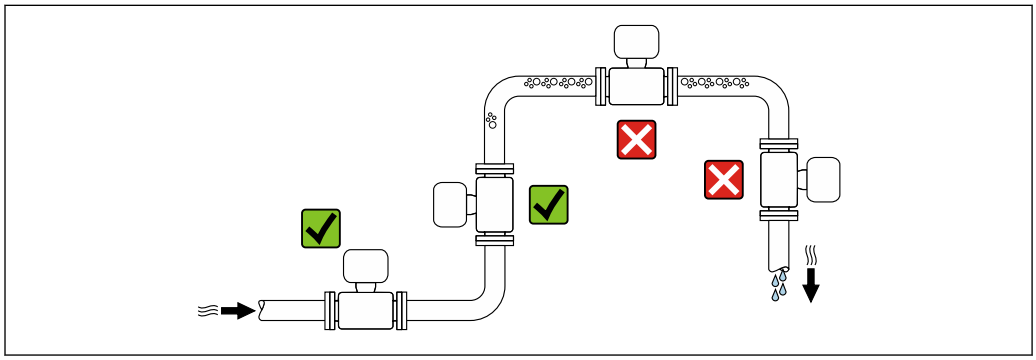

A0028772

To prevent measuring errors arising from accumulation of gas bubbles in the measuring tube, avoid the following mounting locations in the pipe:
- Highest point of a pipeline.
- Directly upstream of a free pipe outlet in a down pipe.

Installation in down pipes

However, the following installation suggestion allows for installation in an open vertical pipeline. Pipe restrictions or the use of an orifice with a smaller cross-section than the nominal diameter prevent the sensor running empty while measurement is in progress.

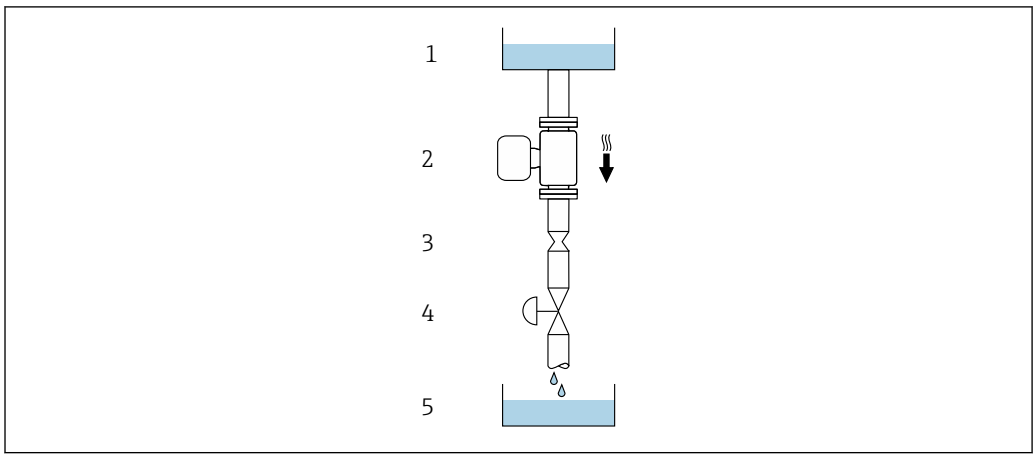

A0028773

4 Installation in a down pipe (e.g. for batching applications)

1 Supply tank
2 Sensor
3 Orifice plate, pipe restriction
4 Valve
5 Batching tank

DN		Ø orifice plate, pipe restriction	
[mm]	[in]	[mm]	[in]
1	1/24	0.8	0.03
2	1/12	1.5	0.06
4	1/8	3.0	0.12

Orientation

The direction of the arrow on the sensor nameplate helps you to install the sensor according to the flow direction (direction of medium flow through the piping).

Orientation			Recommendation
A	Vertical orientation	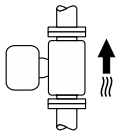 A0015591	✓✓ 1)
B	Horizontal orientation, transmitter at top	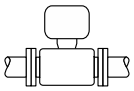 A0015589	✓ 2)
C	Horizontal orientation, transmitter at bottom	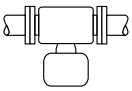 A0015590	✓ 3)
D	Horizontal orientation, transmitter at side	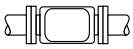 A0015592	✓

1) This orientation is recommended to ensure self-draining.
2) Applications with low process temperatures may decrease the ambient temperature. To maintain the minimum ambient temperature for the transmitter, this orientation is recommended.
3) Applications with high process temperatures may increase the ambient temperature. To maintain the maximum ambient temperature for the transmitter, this orientation is recommended.

If a sensor is installed horizontally with a curved measuring tube, match the position of the sensor to the fluid properties.

Inlet and outlet runs

No special precautions need to be taken for fittings which create turbulence, such as valves, elbows or T-pieces, as long as no cavitation occurs → 24.

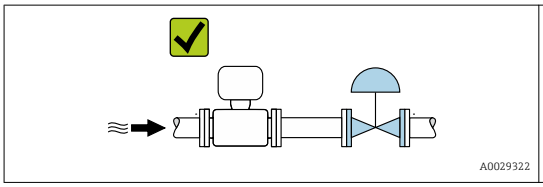
A0029322

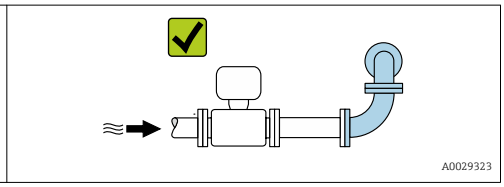
A0029323

Installation dimensions

For the dimensions and installation lengths of the device, see the "Technical Information" document, "Mechanical construction" section.

6.1.2 Environmental and process requirements

Ambient temperature range

Measuring device	▪ −40 to +60 °C (−40 to +140 °F) ▪ Order code for "Test, certificate", option JP: −50 to +60 °C (−58 to +140 °F)
Readability of the local display	−20 to +60 °C (−4 to +140 °F) The readability of the display may be impaired at temperatures outside the temperature range.

Dependency of ambient temperature on medium temperature→ 🗎 179

▶ If operating outdoors:
Avoid direct sunlight, particularly in warm climatic regions.

You can order a weather protection cover from Endress+Hauser. → 🗎 160.

System pressure

It is important that cavitation does not occur, or that gases entrained in the liquids do not outgas.

Cavitation is caused if the pressure drops below the vapor pressure:
- In liquids that have a low boiling point (e.g. hydrocarbons, solvents, liquefied gases)
- In suction lines

▶ Ensure the system pressure is sufficiently high to prevent cavitation and outgassing.

For this reason, the following mounting locations are recommended:
- At the lowest point in a vertical pipe
- Downstream from pumps (no danger of vacuum)

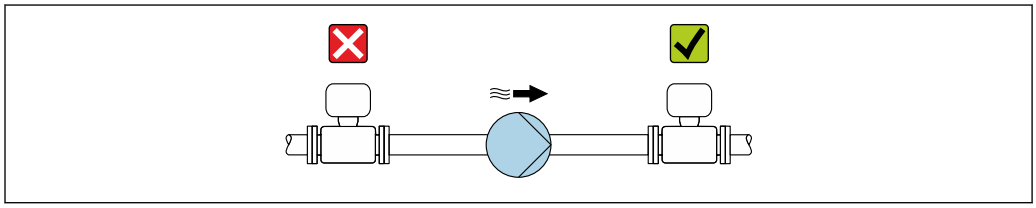

A0028777

Thermal insulation

In the case of some fluids, it is important to keep the heat radiated from the sensor to the transmitter to a low level. A wide range of materials can be used for the required insulation.

NOTICE

Electronics overheating on account of thermal insulation!

▶ Recommended orientation: horizontal orientation, transmitter housing pointing downwards.
▶ Do not insulate the transmitter housing .
▶ Maximum permissible temperature at the lower end of the transmitter housing: 80 °C (176 °F)
▶ Thermal insulation with extended neck free: We recommend that you do not insulate the extended neck in order to ensure optimum dissipation of heat.

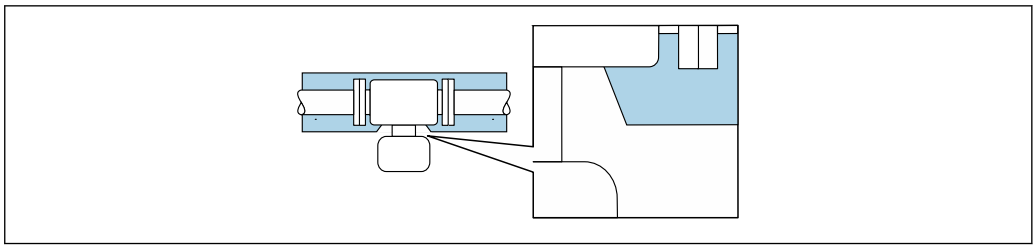

5 *Thermal insulation with extended neck free*

Heating

NOTICE

Electronics can overheat due to elevated ambient temperature!

- Observe maximum permitted ambient temperature for the transmitter .
- Depending on the fluid temperature, take the device orientation requirements into account .

NOTICE

Danger of overheating when heating

- Ensure that the temperature at the lower end of the transmitter housing does not exceed 80 °C (176 °F).
- Ensure that sufficient convection takes place at the transmitter neck.
- Ensure that a sufficiently large area of the transmitter neck remains exposed. The uncovered part serves as a radiator and protects the electronics from overheating and excessive cooling.
- When using in potentially explosive atmospheres, observe the information in the device-specific Ex documentation. For detailed information on the temperature tables, see the separate document entitled "Safety Instructions" (XA) for the device.

Heating options

If a fluid requires that no heat loss should occur at the sensor, users can avail of the following heating options:

- Electrical heating, e.g. with electric band heaters
- Via pipes carrying hot water or steam
- Via heating jackets

Vibrations

The high oscillation frequency of the measuring tubes ensures that the correct operation of the measuring system is not influenced by plant vibrations.

6.1.3 Special mounting instructions

Drainability

When the device is installed in a vertical position, the measuring tube can be drained completely and protected against deposit buildup if the properties of the measured liquid allow this. Furthermore, as only one measuring tube is used the flow is not impeded and the risk of product being retained in the measuring device is reduced to a minimum. The larger internal diameter of the measuring tube [1] also reduces the risk of particles getting trapped in the measuring system. Due to the larger cross-section of the individual measuring tube, the tube is also generally less susceptible to clogging.

1) Compared with the double-tube design with a similar flow capacity and measuring tubes with a smaller internal diameter

Sanitary compatibility

- When installing in hygienic applications, please refer to the information in the "Certificates and approvals/hygienic compatibility" section → 🗎 190
- In the case of measuring devices with the order code for "Housing", option B "Stainless, hygienic", to seal the connection compartment cover, screw it closed finger-tight and then tighten it by another 45° (corresponds to 15 Nm).

Rupture disk

Information that is relevant to the process: → 🗎 180.

⚠ WARNING

Danger from medium escaping!

Medium escaping under pressure can cause injury or material damage.

- ▶ Take precautions to prevent danger to persons and damage if the rupture disk is actuated.
- ▶ Observe information on the rupture disk sticker.
- ▶ Make sure that the function and operation of the rupture disk is not impeded through the installation of the device.
- ▶ Do not remove or damage the rupture disk, drain connection and warning signs.

The position of the rupture disk is indicated by an affixed sticker. In versions without a drain connection (order option CU), the sticker is destroyed if the rupture disk is triggered. The disk can therefore be visually monitored.

To allow any escaping medium to drain in a controlled manner, a drain connection is available for the rupture disk integrated in the sensor: order code for "Sensor option", option CU "Drain connection for rupture disk". This connection is intended for a pipe connection with a ¼ " NPT thread and sealed with a grip plug for protection. To guarantee the function of the rupture disk with a drain connection, the drain connection must be connected to the drain system in a hermetically tight manner.

The drain connection is firmly mounted in place by the manufacturer and may not be removed.

It is not possible to use the holder with a measuring device with a drain connection for a rupture disk: order code for "Sensor option", option CU "Drain connection for rupture disk"

It is not possible to use a heating jacket if the drain connection is used: order code for "Sensor option", option CU "Drain connection for rupture disk"

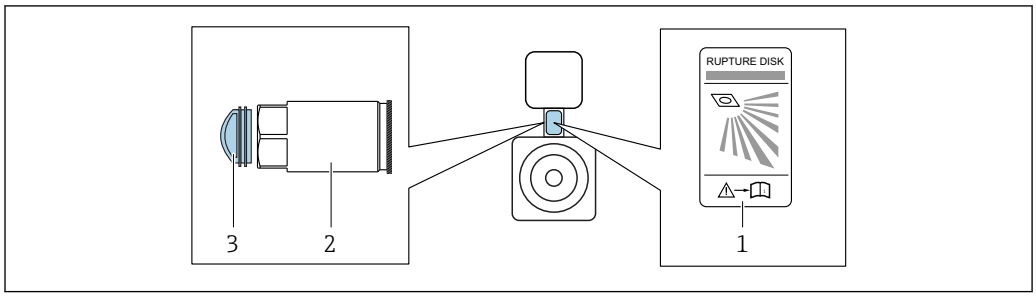

A0042344

1 *Rupture disk label*
2 *Drain connection for rupture disk with 1/4" NPT female thread and 17mm width across flats (AF): order code for "Sensor option", option CU, drain connection for rupture disk*
3 *Transportation guard*

For information on the dimensions: see the "Mechanical construction" section of the "Technical Information" document

Sensor holder

The sensor holder is used to secure the device to a wall, tabletop or pipe (order code for "Accessory enclosed", option PR).

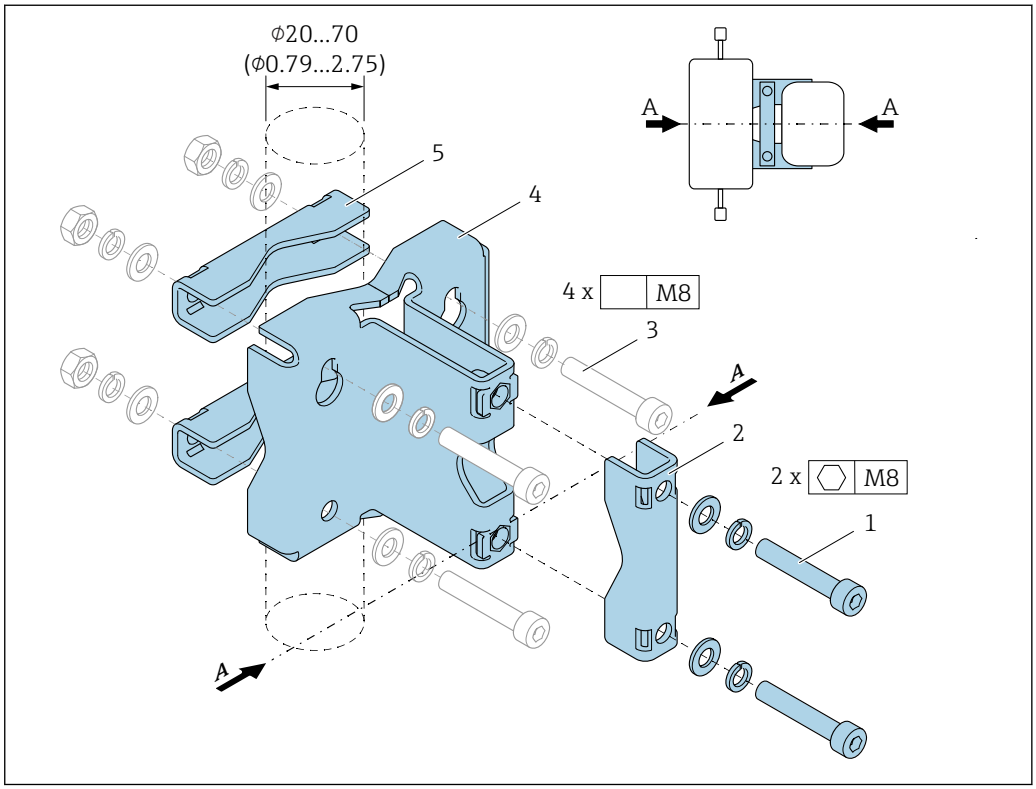

A0036471

1 *2 x Allen screw M8 x 50, washer and spring washer A4*
2 *1 x clamp (measuring device neck)*
3 *4 x securing screw for wall, tabletop or pipe mounting (not supplied)*
4 *1 x base profile*
5 *2 x clamp (pipe mounting)*
A *Measuring device central line*

If the holder is used with a measuring device fitted with a rupture disk, it is important to ensure that the rupture disk in the neck is not covered over and that the cover of the rupture disk is not damaged.

Lubricate all threaded joints prior to mounting. The screws for wall, tabletop or pipe mounting are not supplied with the device and must be chosen to suit the individual installation position.

WARNING

Strain on pipes!

Excessive strain on an unsupported pipe can cause the pipe to break.

- Install the sensor in a pipe that is adequately supported.

The following mounting versions are recommended for the installation:

Use of the sensor holder.

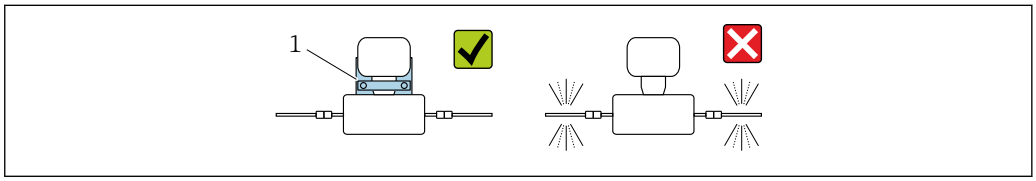

A0036492

1 *Sensor holder (order code for "Accessory enclosed", option PR)*

Mounting on a wall

Screw the sensor holder to the wall with four screws. Two of the four holes to secure the holder are designed to hook into the screws.

Mounting on a table

Screw the sensor holder onto the tabletop with four screws.

Mounting on a pipe

Secure the sensor holder to the pipe with two clamps.

Zero point adjustment

All measuring devices are calibrated in accordance with state-of-the-art technology. Calibration takes place under reference conditions→ 📄 174. Therefore, a zero point adjustment in the field is generally not required.

Experience shows that zero point adjustment is advisable only in special cases:
- To achieve maximum measuring accuracy even with low flow rates.
- Under extreme process or operating conditions (e.g. very high process temperatures or very high-viscosity fluids).

Protective cover

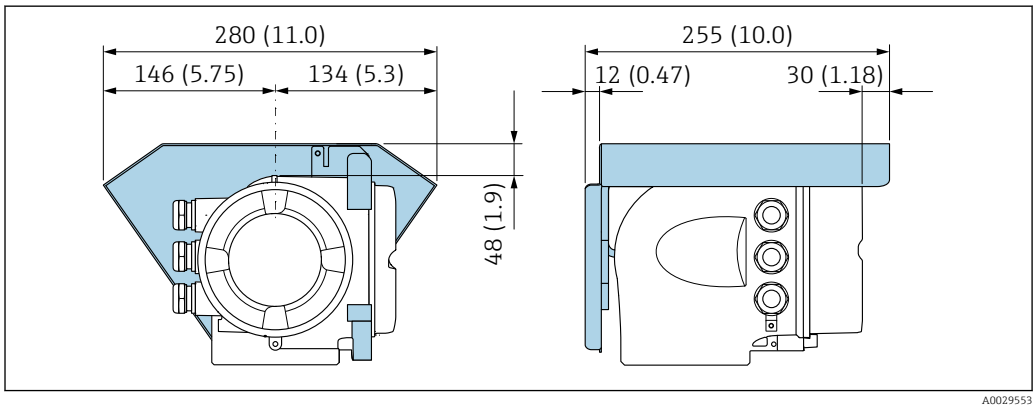

6 Engineering unit mm (in)

6.2 Mounting the measuring device

6.2.1 Required tools

For sensor

For flanges and other process connections: Corresponding mounting tools

6.2.2 Preparing the measuring device

1. Remove all remaining transport packaging.
2. Remove any protective covers or protective caps present from the sensor.
3. Remove stick-on label on the electronics compartment cover.

6.2.3 Mounting the measuring device

⚠ WARNING

Danger due to improper process sealing!

- ▶ Ensure that the inside diameters of the gaskets are greater than or equal to that of the process connections and piping.
- ▶ Ensure that the seals are clean and undamaged.
- ▶ Secure the seals correctly.

1. Ensure that the direction of the arrow on the nameplate of the sensor matches the flow direction of the fluid.
2. Install the measuring device or turn the transmitter housing so that the cable entries do not point upwards.

↳

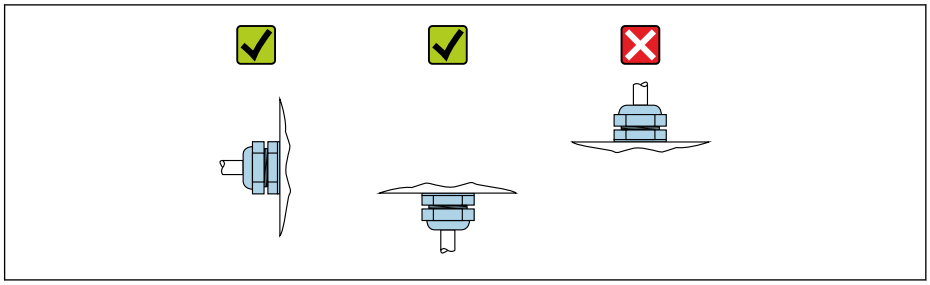

A0029263

6.2.4 Turning the transmitter housing

To provide easier access to the connection compartment or display module, the transmitter housing can be turned.

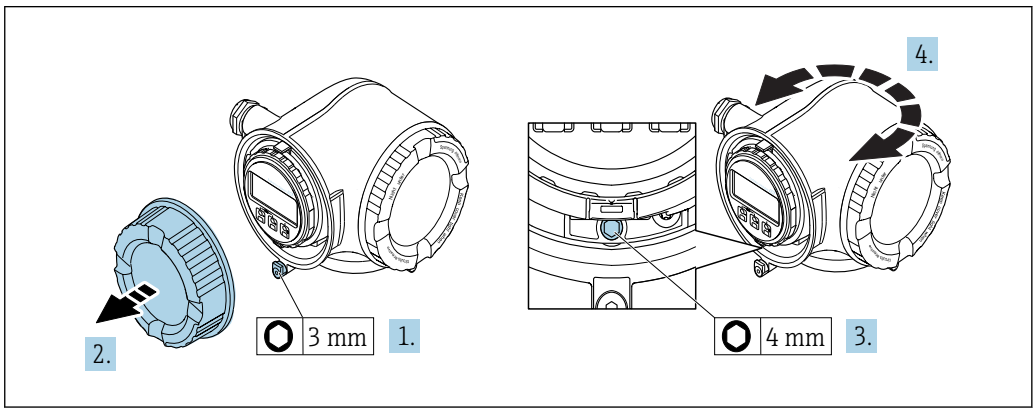

A0029993

1. Depending on the device version: Loosen the securing clamp of the connection compartment cover.
2. Unscrew the connection compartment cover.
3. Release the fixing screw.
4. Turn the housing to the desired position.
5. Firmly tighten the securing screw.
6. Screw on the connection compartment cover.
7. Depending on the device version: Attach the securing clamp of the connection compartment cover.

6.2.5 Turning the display module

The display module can be turned to optimize display readability and operability.

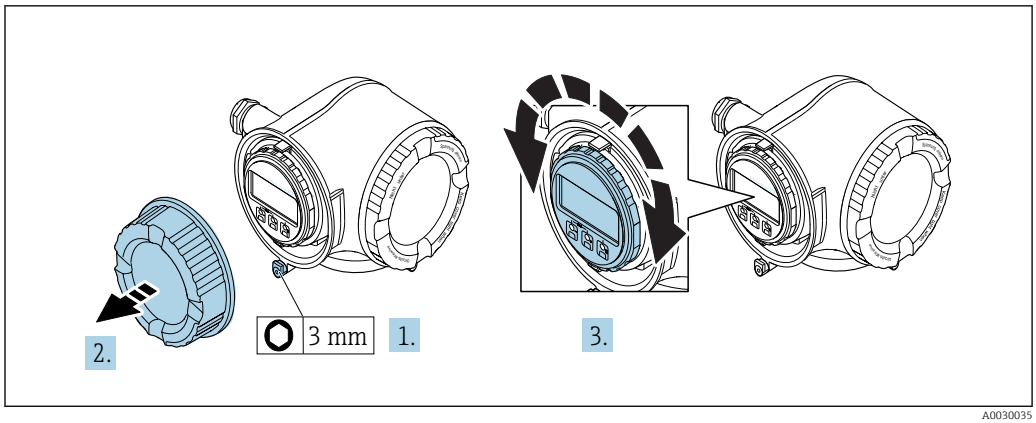

A0030035

1. Depending on the device version: Loosen the securing clamp of the connection compartment cover.
2. Unscrew the connection compartment cover.
3. Turn the display module to the desired position: max. 8 × 45° in each direction.
4. Screw on the connection compartment cover.
5. Depending on the device version: Attach the securing clamp of the connection compartment cover.

6.3 Post-installation check

Is the device undamaged (visual inspection)?	❑
Does the measuring device conform to the measuring point specifications? For example: ▪ Process temperature → 🗎 179 ▪ Process pressure (refer to the section on "Pressure-temperature ratings" in the "Technical Information" document) ▪ Ambient temperature ▪ Measuring range	❑
Has the correct orientation for the sensor been selected ? ▪ According to sensor type ▪ According to medium temperature ▪ According to medium properties (outgassing, with entrained solids)	❑
Does the arrow on the sensor nameplate match the direction of flow of the fluid through the piping → 🗎 23?	❑
Are the measuring point identification and labeling correct (visual inspection)?	❑
Is the device adequately protected from precipitation and direct sunlight?	❑
Are the securing screw and securing clamp tightened securely?	❑

7 Electrical connection

NOTICE

The measuring device does not have an internal circuit breaker.

- ▶ For this reason, assign the measuring device a switch or power-circuit breaker so that the power supply line can be easily disconnected from the mains.
- ▶ Although the measuring device is equipped with a fuse, additional overcurrent protection (maximum 10 A) should be integrated into the system installation.

7.1 Connection conditions

7.1.1 Required tools

- For cable entries: Use corresponding tools
- For securing clamp: Allen key 3 mm
- Wire stripper
- When using stranded cables: Crimper for wire end ferrule
- For removing cables from terminal: Flat blade screwdriver ≤ 3 mm (0.12 in)

7.1.2 Requirements for connecting cable

The connecting cables provided by the customer must fulfill the following requirements.

Electrical safety

In accordance with applicable federal/national regulations.

Protective ground cable

Cable ≥2.08 mm^2 (14 AWG)

The grounding impedance must be less than 1 Ω.

Permitted temperature range

- The installation guidelines that apply in the country of installation must be observed.
- The cables must be suitable for the minimum and maximum temperatures to be expected.

Power supply cable

Standard installation cable is sufficient.

Signal cable

Current output 4 to 20 mA HART

A shielded cable is recommended. Observe grounding concept of the plant.

Current output 0/4 to 20 mA

Standard installation cable is sufficient.

Pulse/frequency/switch output

Standard installation cable is sufficient.

Double pulse output

Standard installation cable is sufficient.

Relay output

Standard installation cable is sufficient.

Current input 0/4 to 20 mA

Standard installation cable is sufficient.

Status input

Standard installation cable is sufficient.

Cable diameter

- Cable glands supplied:
  M20 × 1.5 with cable ⌀ 6 to 12 mm (0.24 to 0.47 in)
- Spring-loaded terminals: Suitable for strands and strands with ferrules.
  Conductor cross-section 0.2 to 2.5 mm^2 (24 to 12 AWG).

Requirements for the connecting cable – Remote display and operating module DKX001

Optionally available connecting cable

A cable is supplied depending on the order option
- Order code for measuring device: order code **030** for "Display; operation", option **O**
  or
- Order code for measuring device: order code **030** for "Display; operation", option **M**
  and
- Order code for DKX001: order code **040** for "Cable", option **A, B, D, E**

Standard cable	2 × 2 × 0.34 mm^2 (22 AWG) PVC cable with common shield (2 pairs, pair-stranded)
Flame resistance	According to DIN EN 60332-1-2
Oil-resistance	According to DIN EN 60811-2-1
Shielding	Tin-plated copper-braid, optical cover ≥ 85 %
Capacitance: core/shield	≤200 pF/m
L/R	≤24 µH/Ω
Available cable length	5 m (15 ft)/10 m (35 ft)/20 m (65 ft)/30 m (100 ft)
Operating temperature	When mounted in a fixed position: −50 to +105 °C (−58 to +221 °F); when cable can move freely: −25 to +105 °C (−13 to +221 °F)

Standard cable - customer-specific cable

No cable is supplied, and it must be provided by the customer (up to max.
300 m (1 000 ft)) for the following order option:
Order code for DKX001: Order code **040** for "Cable", option **1** "None, provided by customer, max 300 m"

A standard cable can be used as the connecting cable.

Standard cable	4 cores (2 pairs); pair-stranded with common shield
Shielding	Tin-plated copper-braid, optical cover ≥ 85 %
Capacitance: core/shield	Maximum 1 000 nF for Zone 1, Class I, Division 1
L/R	Maximum 24 µH/Ω for Zone 1, Class I, Division 1
Cable length	Maximum 300 m (1 000 ft), see the following table

Cross-section	Max. cable length for use in Non-hazardous area, Ex Zone 2, Class I, Division 2 Ex Zone 1, Class I, Division 1
0.34 mm^2 (22 AWG)	80 m (270 ft)
0.50 mm^2 (20 AWG)	120 m (400 ft)
0.75 mm^2 (18 AWG)	180 m (600 ft)
1.00 mm^2 (17 AWG)	240 m (800 ft)
1.50 mm^2 (15 AWG)	300 m (1000 ft)

7.1.3 Terminal assignment

Transmitter: supply voltage, input/outputs

The terminal assignment of the inputs and outputs depends on the individual order version of the device. The device-specific terminal assignment is documented on an adhesive label in the terminal cover.

Supply voltage		Input/output 1		Input/output 2		Input/output 3	
1 (+)	2 (–)	26 (+)	27 (–)	24 (+)	25 (–)	22 (+)	23 (–)
		Device-specific terminal assignment: adhesive label in terminal cover.					

Terminal assignment of the remote display and operating module → 37.

7.1.4 Preparing the measuring device

NOTICE

Insufficient sealing of the housing!

Operational reliability of the measuring device could be compromised.

- Use suitable cable glands corresponding to the degree of protection.

1. Remove dummy plug if present.
2. If the measuring device is supplied without cable glands:
   Provide suitable cable gland for corresponding connecting cable.
3. If the measuring device is supplied with cable glands:
   Observe requirements for connecting cables → 31.

7.2 Connecting the measuring device

NOTICE

Limitation of electrical safety due to incorrect connection!

- Have electrical connection work carried out by appropriately trained specialists only.
- Observe applicable federal/national installation codes and regulations.
- Comply with local workplace safety regulations.
- Always connect the protective ground cable ⏚ before connecting additional cables.
- For use in potentially explosive atmospheres, observe the information in the device-specific Ex documentation.

7.2.1 Connecting the transmitter

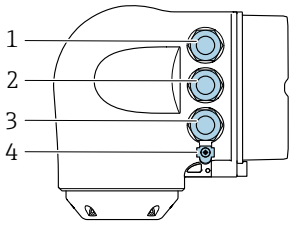

A0026781

1 *Terminal connection for supply voltage*
2 *Terminal connection for signal transmission, input/output*
3 *Terminal connection for signal transmission, input/output or terminal connection for network connection via service interface (CDI-RJ45); optional: connection for external WLAN antenna or remote display and operating module DKX001*
4 *Protective earth (PE)*

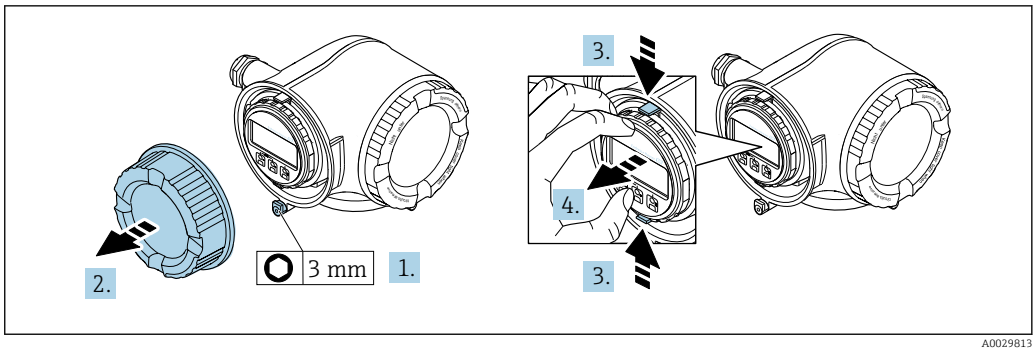

A0029813

1. Loosen the securing clamp of the connection compartment cover.
2. Unscrew the connection compartment cover.
3. Squeeze the tabs of the display module holder together.
4. Remove the display module holder.

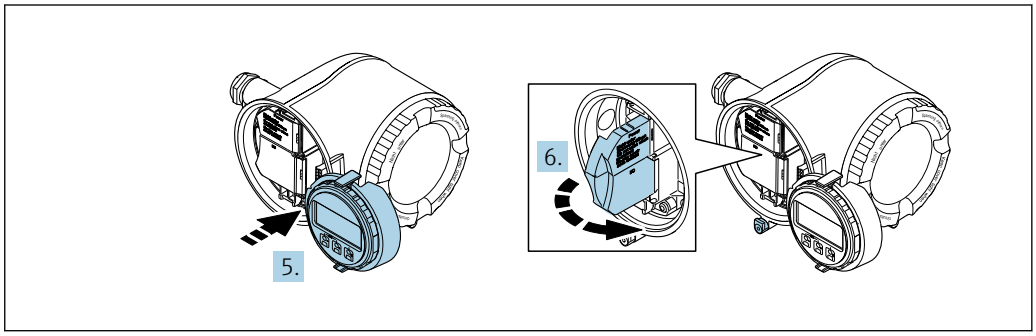

A0029814

5. Attach the holder to the edge of the electronics compartment.
6. Open the terminal cover.

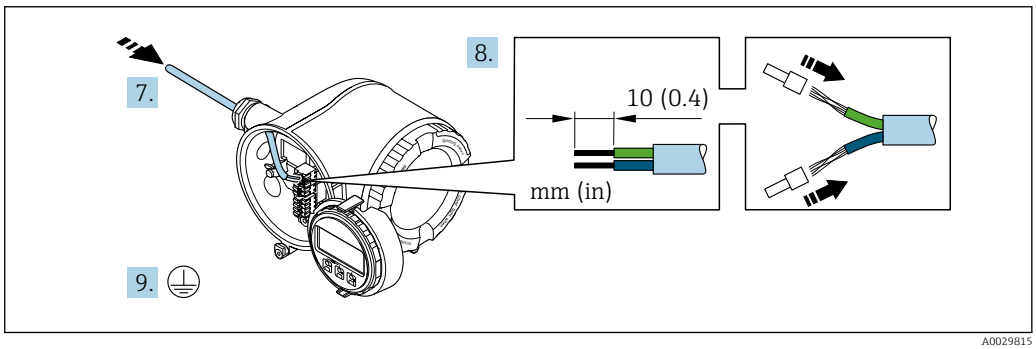

A0029815

7. Push the cable through the cable entry . To ensure tight sealing, do not remove the sealing ring from the cable entry.
8. Strip the cable and cable ends. In the case of stranded cables, also fit ferrules.
9. Connect the protective ground.

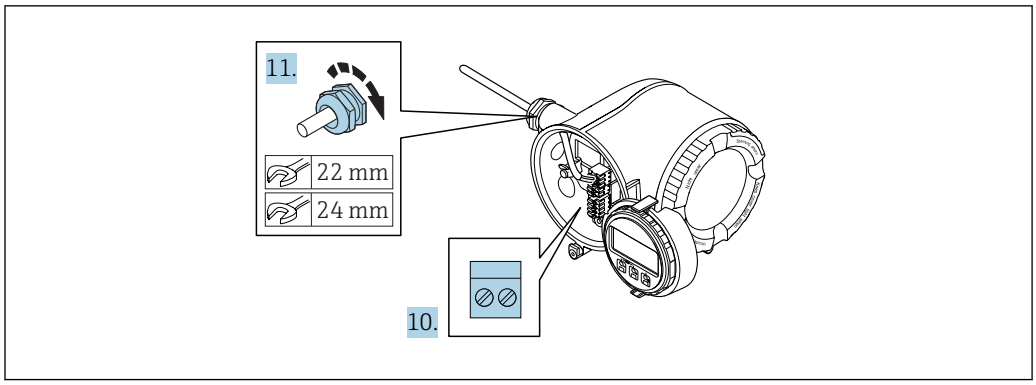

A0029816

10. Connect the cable in accordance with the terminal assignment .
    ↳ **Signal cable terminal assignment:** The device-specific terminal assignment is documented on an adhesive label in the terminal cover.
    Supply voltage terminal assignment: Adhesive label in the terminal cover or → 34.
11. Firmly tighten the cable glands.
    ↳ This concludes the cable connection process.
12. Close the terminal cover.
13. Fit the display module holder in the electronics compartment.
14. Screw on the connection compartment cover.
15. Secure the securing clamp of the connection compartment cover.

Removing a cable

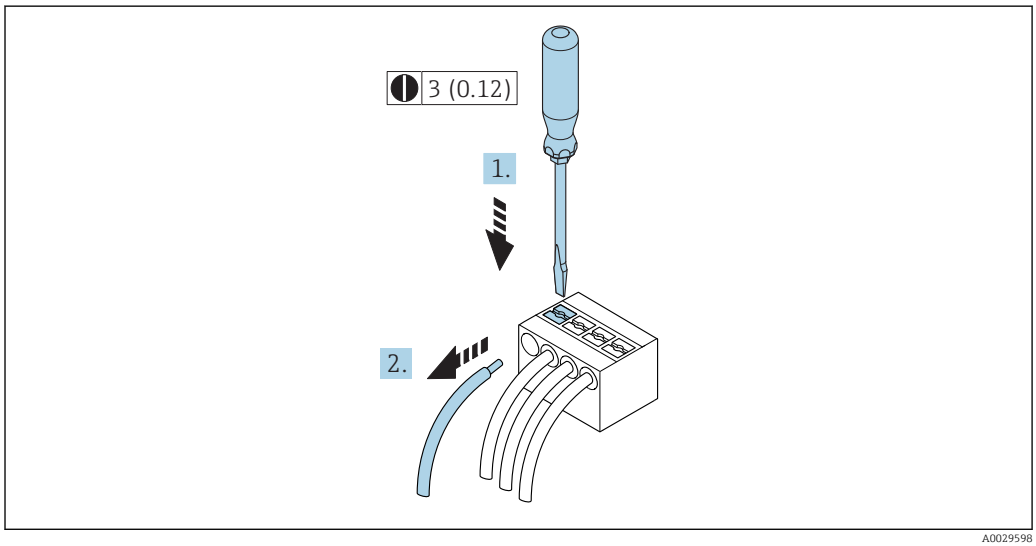

A0029598

7 *Engineering unit mm (in)*

1. To remove a cable from the terminal, use a flat-blade screwdriver to push the slot between the two terminal holes
2. while simultaneously pulling the cable end out of the terminal.

7.2.2 Connecting the remote display and operating module DKX001

The remote display and operating module DKX001 is available as an optional extra → 160.

- The remote display and operating module DKX001 is only available for the following housing version: order code for "Housing": option A "Aluminum, coated"
- The measuring device is always supplied with a dummy cover when the remote display and operating module DKX001 is ordered directly with the measuring device. Display or operation at the transmitter is not possible in this case.
- If ordered subsequently, the remote display and operating module DKX001 may not be connected at the same time as the existing measuring device display module. Only one display or operation unit may be connected to the transmitter at any one time.

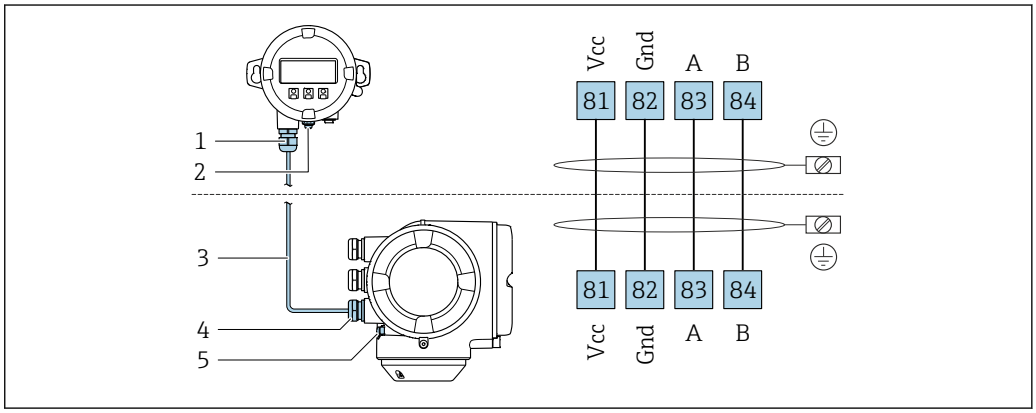

1 *Remote display and operating module DKX001*
2 *Protective earth (PE)*
3 *Connecting cable*
4 *Measuring device*
5 *Protective earth (PE)*

7.3 Ensuring potential equalization

7.3.1 Requirements

No special measures for potential equalization are required.

7.4 Special connection instructions

7.4.1 Connection examples

Current output 4 to 20 mA HART

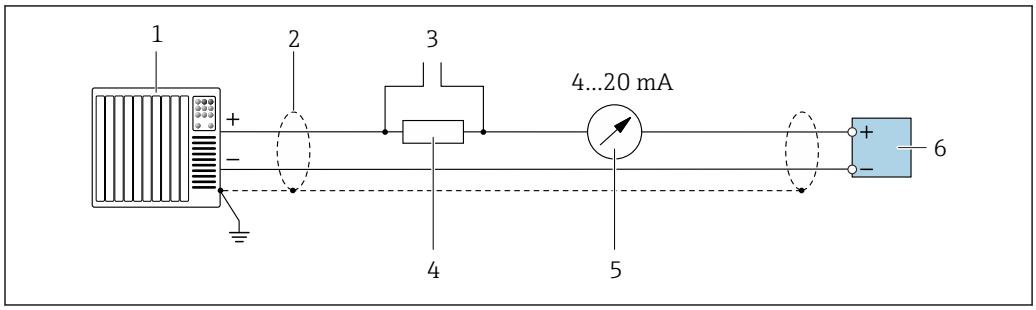

8 Connection example for 4 to 20 mA HART current output (active)

1 *Automation system with current input (e.g. PLC)*
2 *Cable shield provided at one end. The cable shield must be grounded at both ends to comply with EMC requirements; observe cable specifications*
3 *Connection for HART operating devices → 63*
4 *Resistor for HART communication (≥ 250 Ω): observe maximum load → 167*
5 *Analog display unit: observe maximum load → 167*
6 *Transmitter*

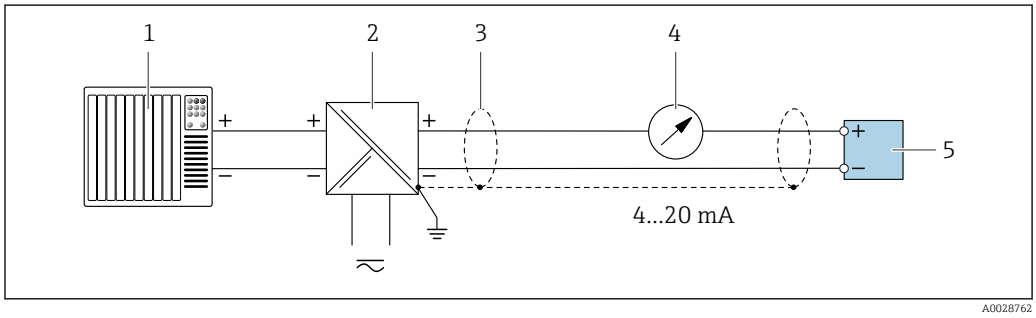

9 Connection example for 4 to 20 mA HART current output (passive)

1 *Automation system with current input (e.g. PLC)*
2 *Power supply*
3 *Cable shield provided at one end. The cable shield must be grounded at both ends to comply with EMC requirements; observe cable specifications*
4 *Analog display unit: observe maximum load → 167*
5 *Transmitter*

HART input

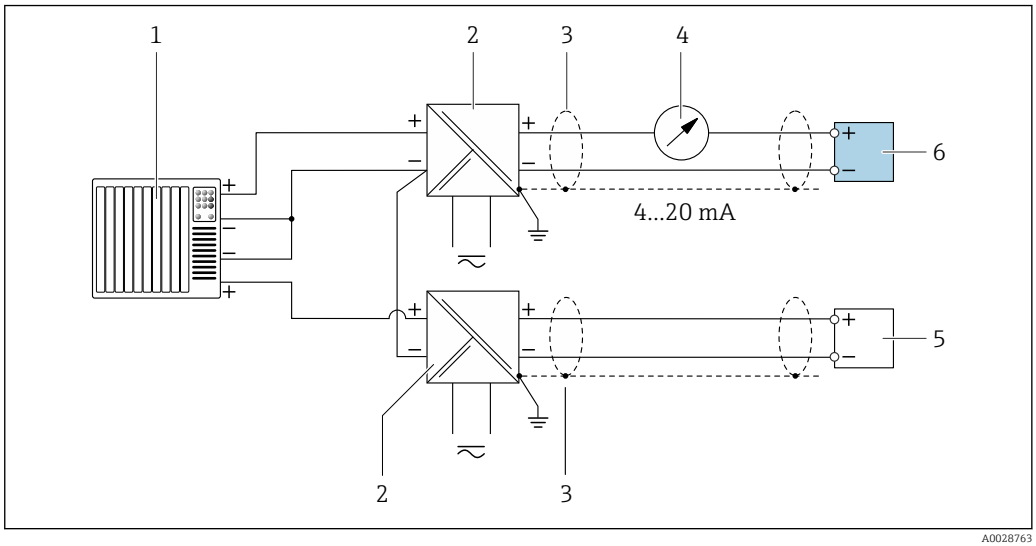

10 *Connection example for HART input with a common negative (passive)*

1 *Automation system with HART output (e.g. PLC)*
2 *Active barrier for power supply (e.g. RN221N)*
3 *Cable shield provided at one end. The cable shield must be grounded at both ends to comply with EMC requirements; observe cable specifications*
4 *Analog display unit: observe maximum load → 167*
5 *Pressure measuring device (e.g. Cerabar M, Cerabar S): see requirements*
6 *Transmitter*

Current output 4-20 mA

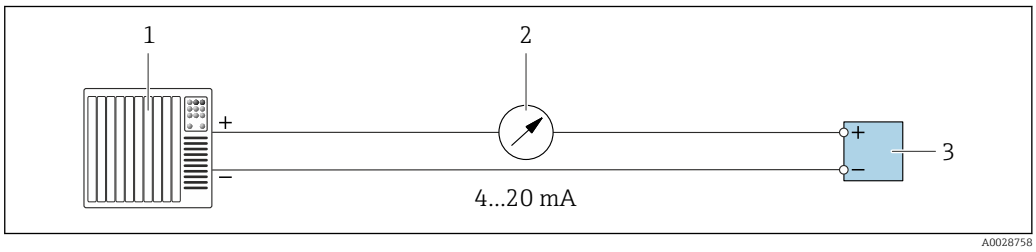

11 *Connection example for 4-20 mA current output (active)*

1 *Automation system with current input (e.g. PLC)*
2 *Analog display unit: observe maximum load → 167*
3 *Transmitter*

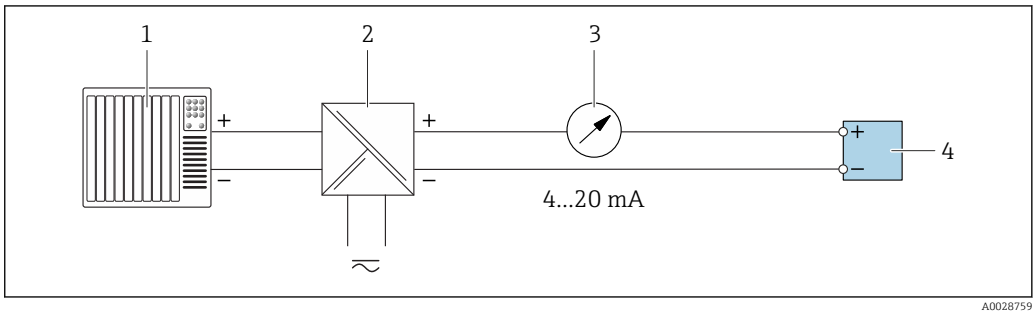

12 *Connection example for 4-20 mA current output (passive)*

1 *Automation system with current input (e.g. PLC)*
2 *Active barrier for power supply (e.g. RN221N)*
3 *Analog display unit: observe maximum load → 167*
4 *Transmitter*

Pulse/frequency output

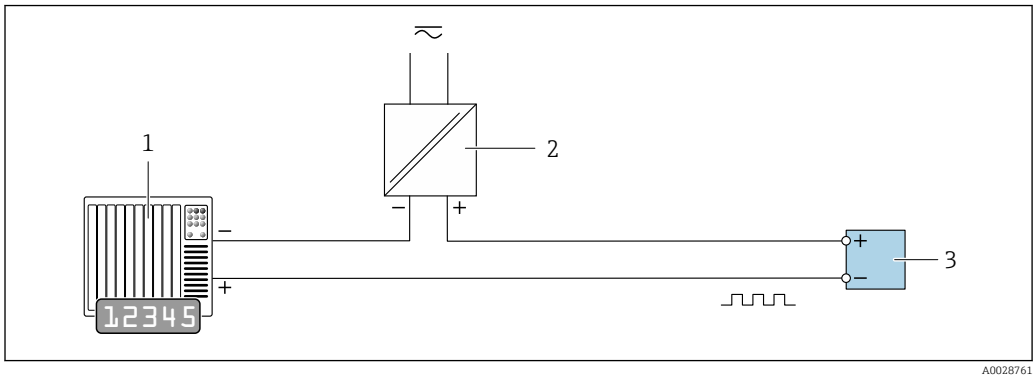

13 Connection example for pulse/frequency output (passive)

1 *Automation system with pulse/frequency input (e.g. PLC)*
2 *Power supply*
3 *Transmitter: Observe input values → 169*

Switch output

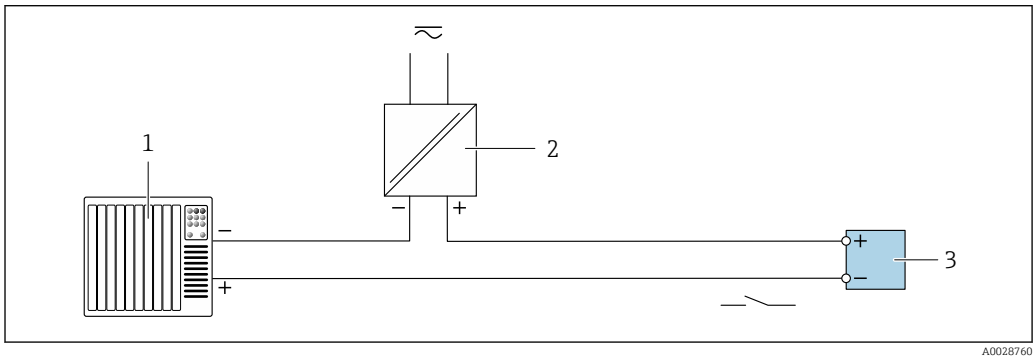

14 Connection example for switch output (passive)

1 *Automation system with switch input (e.g. PLC)*
2 *Power supply*
3 *Transmitter: Observe input values → 169*

Double pulse output

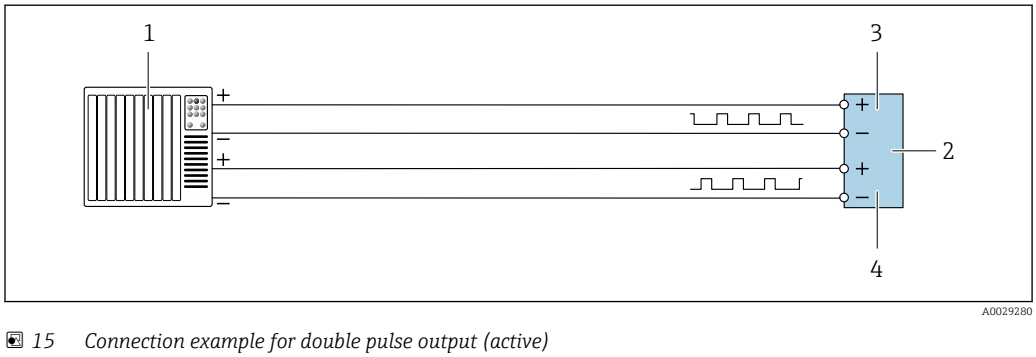

15 Connection example for double pulse output (active)

1 *Automation system with double pulse input (e.g. PLC)*
2 *Transmitter: Observe input values → 170*
3 *Double pulse output*
4 *Double pulse output (slave), phase-shifted*

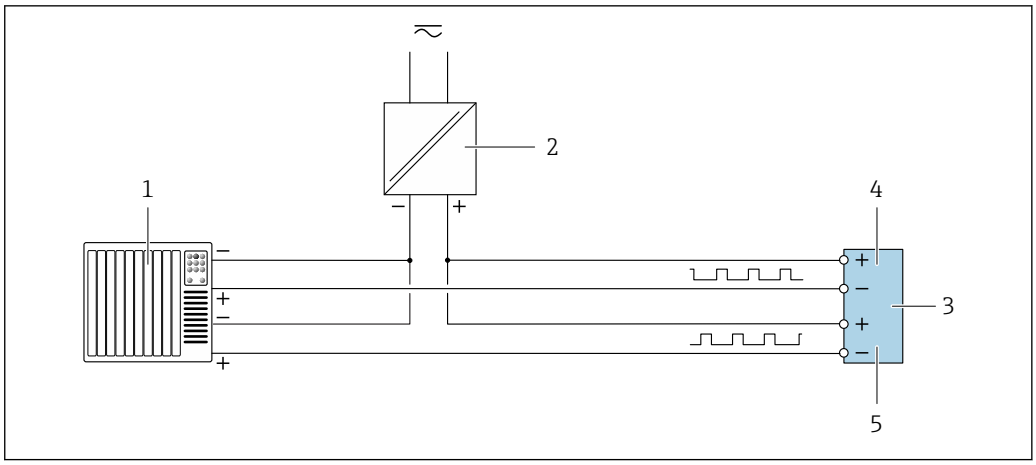

16 *Connection example for double pulse output (passive)*

1 *Automation system with double pulse input (e.g. PLC)*
2 *Power supply*
3 *Transmitter: Observe input values → 170*
4 *Double pulse output*
5 *Double pulse output (slave), phase-shifted*

Relay output

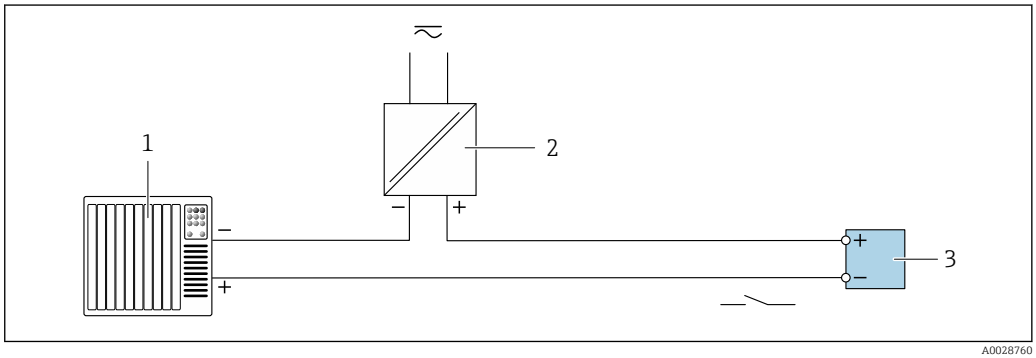

17 *Connection example for relay output (passive)*

1 *Automation system with relay input (e.g. PLC)*
2 *Power supply*
3 *Transmitter: Observe input values → 171*

Current input

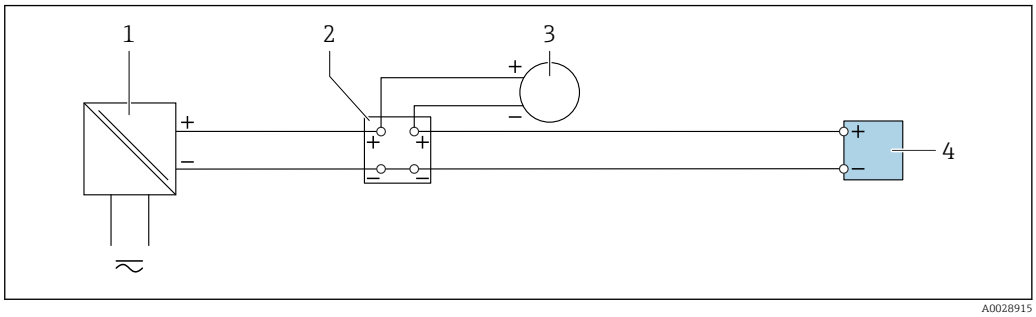

18 *Connection example for 4 to 20 mA current input*

1 *Power supply*
2 *Terminal box*
3 *External measuring device (to read in pressure or temperature, for instance)*
4 *Transmitter*

Status input

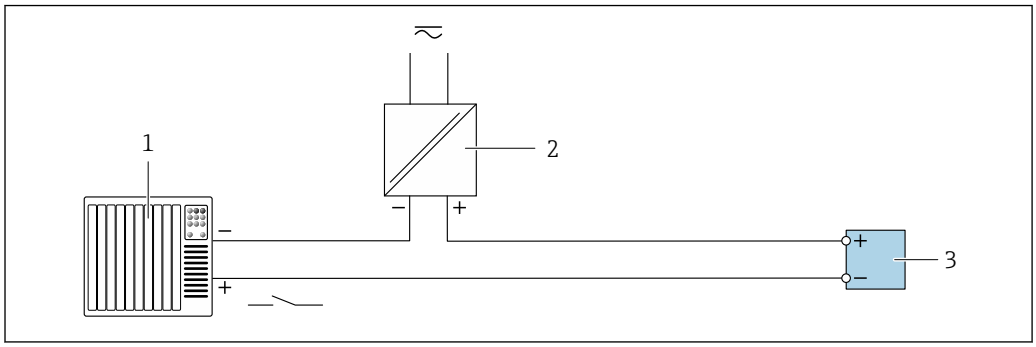

19 *Connection example for status input*

1 *Automation system with status output (e.g. PLC)*
2 *Power supply*
3 *Transmitter*

7.5 Ensuring the degree of protection

The measuring device fulfills all the requirements for the IP66/67 degree of protection, Type 4X enclosure.

To guarantee IP66/67 degree of protection, Type 4X enclosure, carry out the following steps after the electrical connection:

1. Check that the housing seals are clean and fitted correctly.
2. Dry, clean or replace the seals if necessary.
3. Tighten all housing screws and screw covers.
4. Firmly tighten the cable glands.
5. To ensure that moisture does not enter the cable entry:
   Route the cable so that it loops down before the cable entry ("water trap").

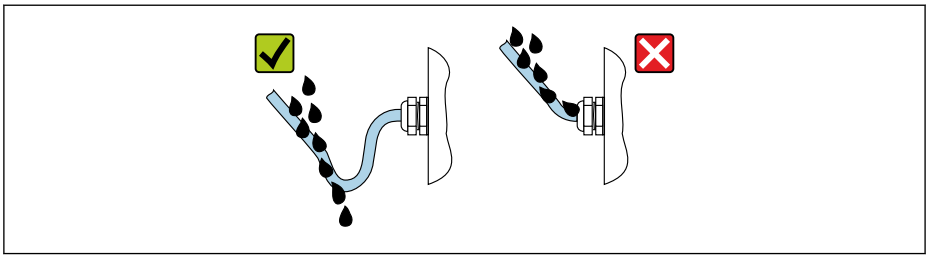

6. Insert dummy plugs into unused cable entries.

7.6 Post-connection check

Are cables or the device undamaged (visual inspection)?	❑
Do the cables used meet the requirements?	❑
Do the cables have adequate strain relief?	❑
Are all the cable glands installed, firmly tightened and leak-tight? Cable run with "water trap" → 42?	❑
If supply voltage is present, do values appear on the display module?	❑

8 Operation options

8.1 Overview of operation options

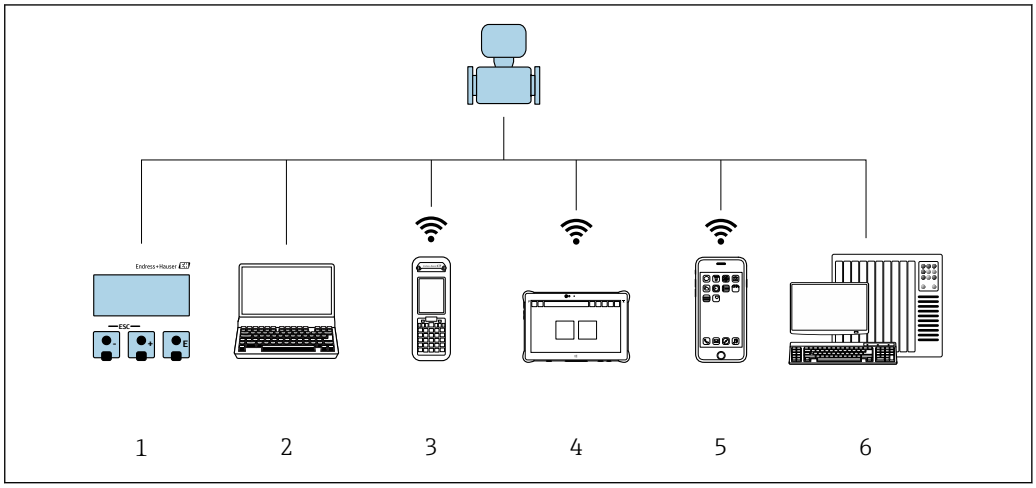

A0034513

1 *Local operation via display module*
2 *Computer with Web browser (e.g. Internet Explorer) or with operating tool (e.g. FieldCare, DeviceCare, AMS Device Manager, SIMATIC PDM)*
3 *Field Xpert SFX350 or SFX370*
4 *Field Xpert SMT70*
5 *Mobile handheld terminal*
6 *Control system (e.g. PLC)*

8.2 Structure and function of the operating menu

8.2.1 Structure of the operating menu

For an overview of the operating menu for experts: "Description of Device Parameters" document supplied with the device→ 194

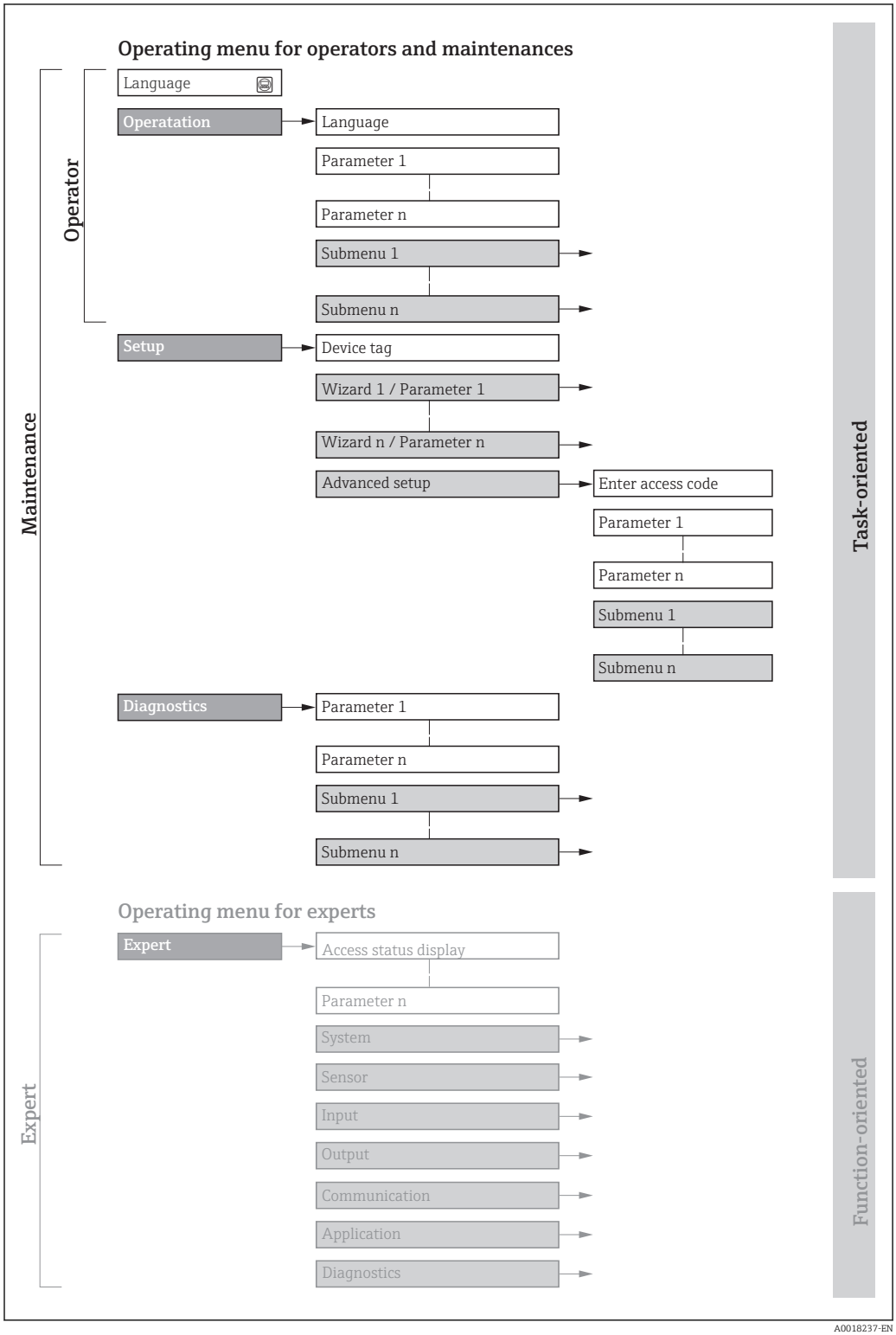

20 *Schematic structure of the operating menu*

8.2.2 Operating philosophy

The individual parts of the operating menu are assigned to certain user roles (operator, maintenance etc.). Each user role contains typical tasks within the device lifecycle.

Menu/parameter		User role and tasks	Content/meaning
Language	task-oriented	**Role "Operator", "Maintenance"** Tasks during operation: ▪ Configuring the operational display ▪ Reading measured values	▪ Defining the operating language ▪ Defining the Web server operating language ▪ Resetting and controlling totalizers
Operation			▪ Configuring the operational display (e.g. display format, display contrast) ▪ Resetting and controlling totalizers
Setup		**"Maintenance" role** Commissioning: ▪ Configuration of the measurement ▪ Configuration of the inputs and outputs ▪ Configuration of the communication interface	Wizards for fast commissioning: ▪ Setting the system units ▪ Configuration of the communication interface ▪ Defining the medium ▪ Displaying the I/O/configuration ▪ Configuring the inputs ▪ Configuring the outputs ▪ Configuration of the operational display ▪ Setting the low flow cut off ▪ Configuring partial and empty pipe detection Advanced setup ▪ For more customized configuration of the measurement (adaptation to special measuring conditions) ▪ Configuration of totalizers ▪ Configuring the WLAN settings ▪ Administration (define access code, reset measuring device)
Diagnostics		**"Maintenance" role** Fault elimination: ▪ Diagnostics and elimination of process and device errors ▪ Measured value simulation	Contains all parameters for error detection and analyzing process and device errors: ▪ Diagnostic list Contains up to 5 currently pending diagnostic messages. ▪ Event logbook Contains event messages that have occurred. ▪ Device information Contains information for identifying the device. ▪ Measured values Contains all current measured values. ▪ **Data logging** submenu with "Extended HistoROM" order option Storage and visualization of measured values ▪ Heartbeat The functionality of the device is checked on demand and the verification results are documented. ▪ Simulation Is used to simulate measured values or output values.
Expert	function-oriented	Tasks that require detailed knowledge of the function of the device: ▪ Commissioning measurements under difficult conditions ▪ Optimal adaptation of the measurement to difficult conditions ▪ Detailed configuration of the communication interface ▪ Error diagnostics in difficult cases	Contains all the parameters of the device and makes it possible to access these parameters directly using an access code. The structure of this menu is based on the function blocks of the device: ▪ System Contains all higher-order device parameters which do not concern the measurement or the communication interface. ▪ Sensor Configuration of the measurement. ▪ Input Configuration of the status input. ▪ Output Configuration of the analog current outputs as well as the pulse/frequency and switch output. ▪ Communication Configuration of the digital communication interface and the Web server. ▪ Application Configuration of the functions that go beyond the actual measurement (e.g. totalizer). ▪ Diagnostics Error detection and analysis of process and device errors and for device simulation and Heartbeat Technology.

8.3 Access to the operating menu via the local display

8.3.1 Operational display

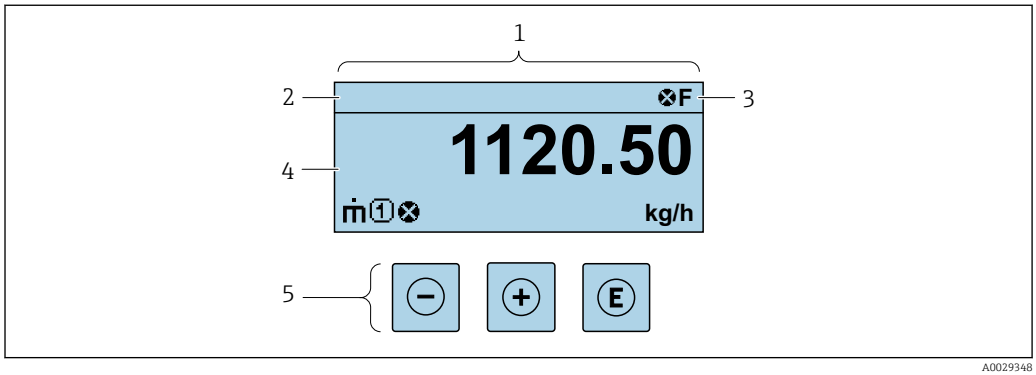

1 *Operational display*
2 *Device tag*
3 *Status area*
4 *Display area for measured values (4-line)*
5 *Operating elements→ 📄 51*

Status area

The following symbols appear in the status area of the operational display at the top right:
- Status signals→ 📄 139
  - **F**: Failure
  - **C**: Function check
  - **S**: Out of specification
  - **M**: Maintenance required
- Diagnostic behavior→ 📄 140
  - ⊗: Alarm
  - ⚠: Warning
- 🔒: Locking (the device is locked via the hardware)
- ⇆: Communication (communication via remote operation is active)

Display area

In the display area, each measured value is prefaced by certain symbol types for further description:

	Measured variable	Measurement channel number	Diagnostic behavior
	↓	↓	↓
Example		1	⚠
			Appears only if a diagnostics event is present for this measured variable.

Measured values

Symbol	Meaning
ṁ	Mass flow
U̇	▪ Volume flow ▪ Corrected volume flow

ρ	▪ Density ▪ Reference density
🌡	Temperature
Σ	Totalizer ℹ The measurement channel number indicates which of the three totalizers is displayed.
⊖	Output ℹ The measurement channel number indicates which of the outputs is displayed.
⊕	Status input

Measurement channel numbers

Symbol	Meaning
1 ... 4	Measurement channel 1 to 4
The measurement channel number is displayed only if more than one channel is present for the same measured variable type (e.g. Totalizer 1 to 3).	

Diagnostic behavior

The diagnostic behavior pertains to a diagnostic event that is relevant to the displayed measured variable. For information on the symbols → 📄 140

ℹ The number and display format of the measured values can be configured via the **Format display** parameter (→ 📄 101).

8.3.2 Navigation view

In the submenu	In the wizard
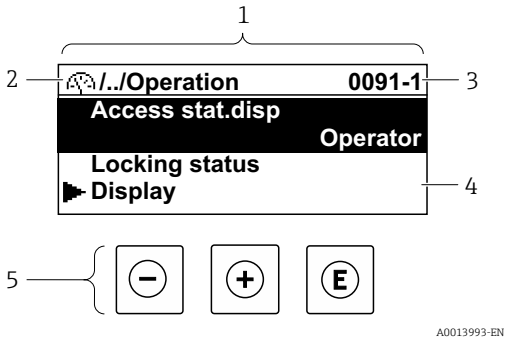	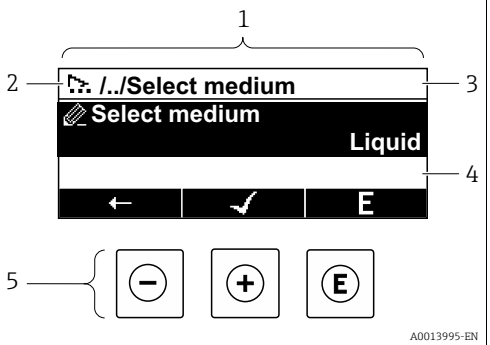

1	*Navigation view*
2	*Navigation path to current position*
3	*Status area*
4	*Display area for navigation*
5	*Operating elements → 📄 51*

Navigation path

The navigation path - displayed at the top left in the navigation view - consists of the following elements:

	▪ In the submenu: Display symbol for menu ▪ In the wizard: Display symbol for wizard	Omission symbol for operating menu levels in between	Name of current ▪ Submenu ▪ Wizard ▪ Parameters
	↓	↓	↓
Examples		/ ../	**Display**
		/ ../	**Display**

For more information about the icons in the menu, refer to the "Display area" section → 48

Status area

The following appears in the status area of the navigation view in the top right corner:
- In the submenu
  - The direct access code for the parameter you are navigating to (e.g. 0022-1)
  - If a diagnostic event is present, the diagnostic behavior and status signal
- In the wizard
  If a diagnostic event is present, the diagnostic behavior and status signal

- For information on the diagnostic behavior and status signal → 139
- For information on the function and entry of the direct access code → 53

Display area

Menus

Symbol	Meaning
	Operation Appears: ▪ In the menu next to the "Operation" selection ▪ At the left in the navigation path in the **Operation** menu
	Setup Appears: ▪ In the menu next to the "Setup" selection ▪ At the left in the navigation path in the **Setup** menu
	Diagnostics Appears: ▪ In the menu next to the "Diagnostics" selection ▪ At the left in the navigation path in the **Diagnostics** menu
	Expert Appears: ▪ In the menu next to the "Expert" selection ▪ At the left in the navigation path in the **Expert** menu

Submenus, wizards, parameters

Symbol	Meaning
	Submenu
	Wizard
	Parameters within a wizard No display symbol exists for parameters in submenus.

Locking

Symbol	Meaning
🔒	**Parameter locked** When displayed in front of a parameter name, indicates that the parameter is locked. ▪ By a user-specific access code ▪ By the hardware write protection switch

Wizard operation

Symbol	Meaning
←	Switches to the previous parameter.
✓	Confirms the parameter value and switches to the next parameter.
E	Opens the editing view of the parameter.

8.3.3 Editing view

Numeric editor

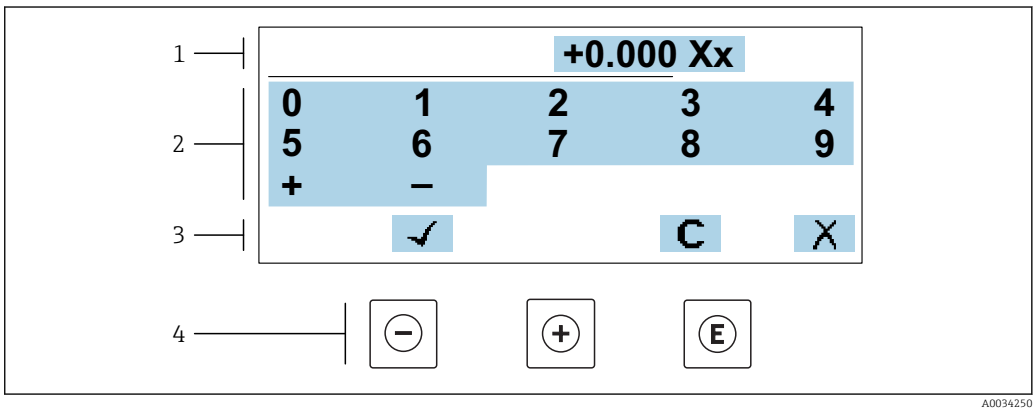

21 For entering values in parameters (e.g. limit values)

1 Entry display area
2 Input screen
3 Confirm, delete or reject entry
4 Operating elements

Text editor

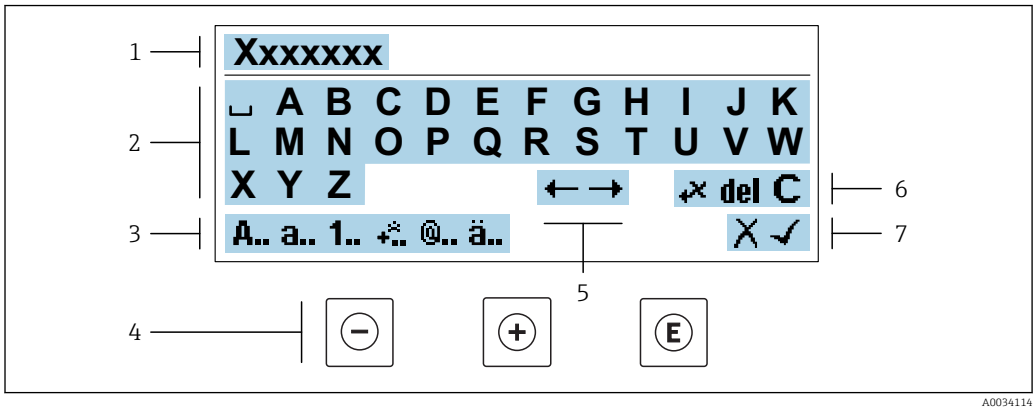

22 *For entering text in parameters (e.g. tag name)*

1 *Entry display area*
2 *Current input screen*
3 *Change input screen*
4 *Operating elements*
5 *Move entry position*
6 *Delete entry*
7 *Reject or confirm entry*

Using the operating elements in the editing view

Operating key(s)	Meaning
⊖	**Minus key** Move the entry position to the left.
⊕	**Plus key** Move the entry position to the right.
Ⓔ	**Enter key** ▪ Press the key briefly: confirm your selection. ▪ Press the key for 2 s: confirm the entry.
⊖ + ⊕	**Escape key combination (press keys simultaneously)** Close the editing view without accepting the changes.

Input screens

Symbol	Meaning
A..	Upper case
a..	Lower case
1..	Numbers
+..	Punctuation marks and special characters: = + – * / ² ³ ¼ ½ ¾ ( ) [ ] < > { }
@..	Punctuation marks and special characters: ' " ` ^ . , ; : ? ! % µ ° € $ £ ¥ § @ # / \ I ~ & _
ä..	Umlauts and accents

Controlling data entries

Symbol	Meaning
←→	Move entry position
✕	Reject entry
✓	Confirm entry
←✕	Delete character immediately to the left of the entry position
del	Delete character immediately to the right of the entry position
C	Clear all the characters entered

8.3.4 Operating elements

Operating key(s)	Meaning
⊖	**Minus key** *In a menu, submenu* Moves the selection bar upwards in a picklist. *With a Wizard* Confirms the parameter value and goes to the previous parameter. *With a text and numeric editor* Move the entry position to the left.
⊕	**Plus key** *In a menu, submenu* Moves the selection bar downwards in a picklist. *With a Wizard* Confirms the parameter value and goes to the next parameter. *With a text and numeric editor* Move the entry position to the right.

Ⓔ	**Enter key**
	For operational display
	Pressing the key briefly opens the operating menu.
	In a menu, submenu
	▪ Pressing the key briefly:
	  ▪ Opens the selected menu, submenu or parameter.
	  ▪ Starts the wizard.
	  ▪ If help text is open, closes the help text of the parameter.
	▪ Pressing the key for 2 s for parameter:
	  If present, opens the help text for the function of the parameter.
	With a Wizard
	Opens the editing view of the parameter.
	With a text and numeric editor
	▪ Press the key briefly: confirm your selection.
	▪ Press the key for 2 s: confirm the entry.

Operating key(s)	Meaning

⊖ + ⊕	**Escape key combination (press keys simultaneously)**
	In a menu, submenu
	▪ Pressing the key briefly:
	  ▪ Exits the current menu level and takes you to the next higher level.
	  ▪ If help text is open, closes the help text of the parameter.
	▪ Pressing the key for 2 s returns you to the operational display ("home position").
	With a Wizard
	Exits the wizard and takes you to the next higher level.
	With a text and numeric editor
	Close the editing view without accepting the changes.

⊖ + Ⓔ	**Minus/Enter key combination (press the keys simultaneously)** ▪ If the keypad lock is active: Press the key for 3 s: deactivate the keypad lock. ▪ If the keypad lock is not active: Press the key for 3 s: the context menu opens along with the option for activating the keypad lock.

8.3.5 Opening the context menu

Using the context menu, the user can call up the following menus quickly and directly from the operational display:

- Setup
- Data backup
- Simulation

Calling up and closing the context menu

The user is in the operational display.

1. Press the ⊖ and Ⓔ keys for longer than 3 seconds.
   ↳ The context menu opens.

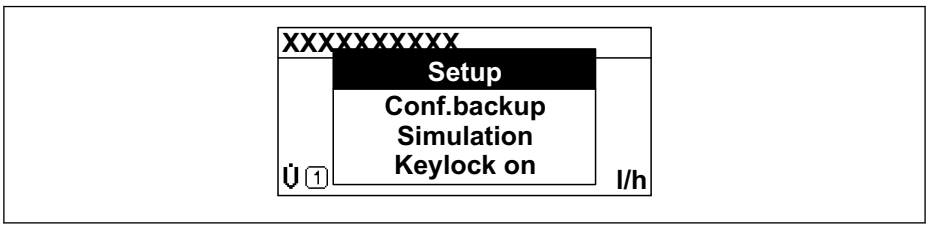

A0034608-EN

2. Press ⊖ + ⊕ simultaneously.
   ↳ The context menu is closed and the operational display appears.

Calling up the menu via the context menu

1. Open the context menu.
2. Press ⊕ to navigate to the desired menu.
3. Press Ⓔ to confirm the selection.
   ↳ The selected menu opens.

8.3.6 Navigating and selecting from list

Different operating elements are used to navigate through the operating menu. The navigation path is displayed on the left in the header. Icons are displayed in front of the individual menus. These icons are also shown in the header during navigation.

For an explanation of the navigation view with symbols and operating elements → 47

Example: Setting the number of displayed measured values to "2 values"

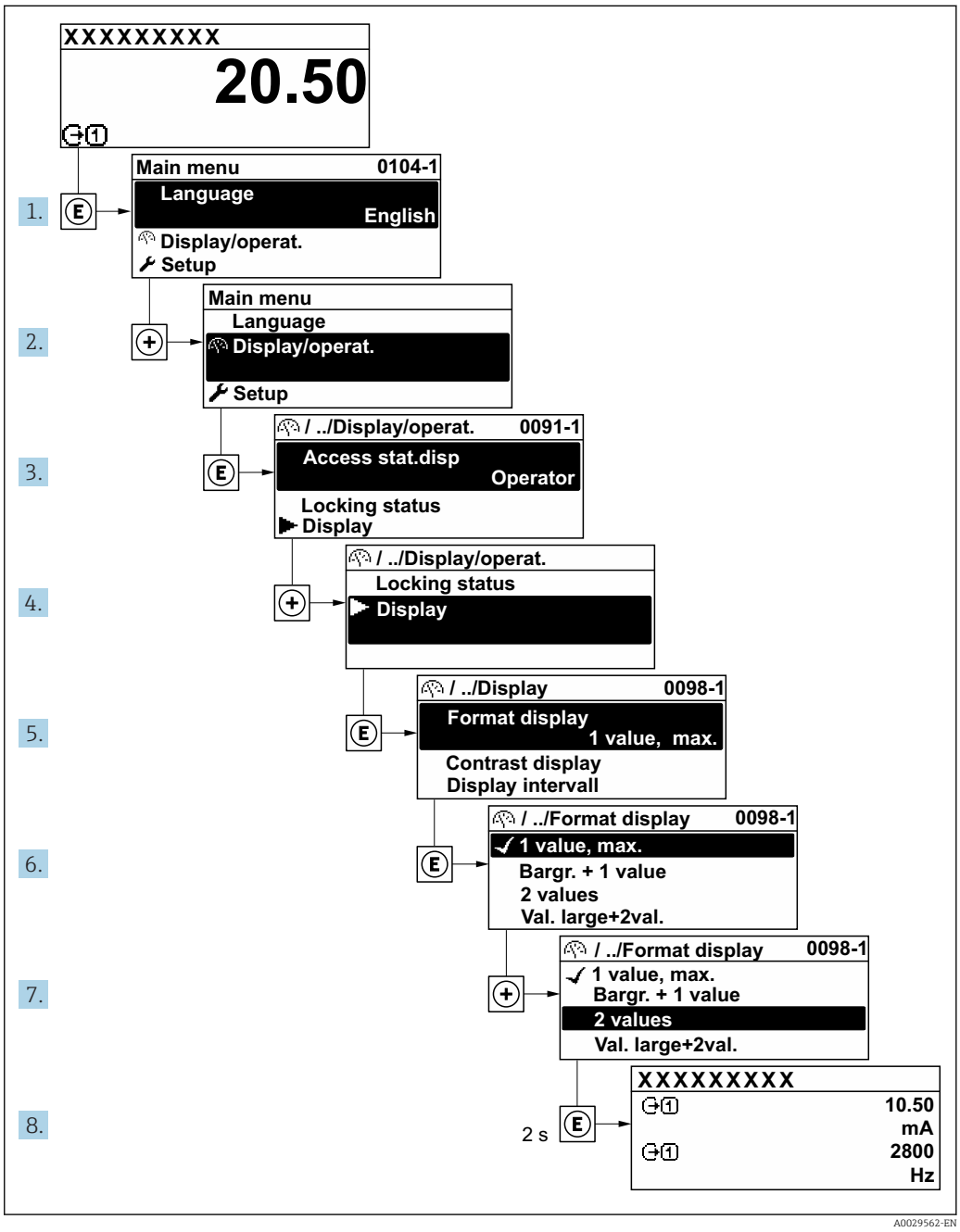

8.3.7 Calling the parameter directly

A parameter number is assigned to every parameter to be able to access a parameter directly via the onsite display. Entering this access code in the **Direct access** parameter calls up the desired parameter directly.

Navigation path
Expert → Direct access

The direct access code consists of a 5-digit number (at maximum) and the channel number, which identifies the channel of a process variable: e.g. 00914-2. In the navigation view, this appears on the right-hand side in the header of the selected parameter.

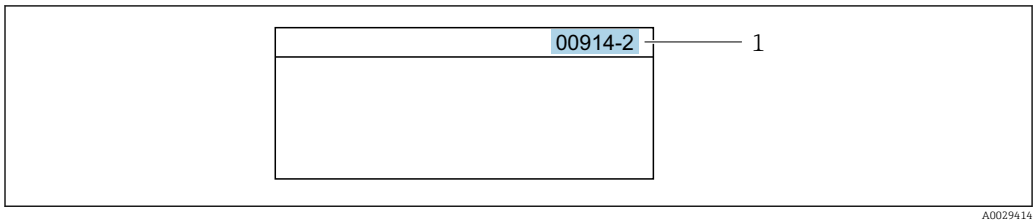

1 Direct access code

Note the following when entering the direct access code:
- The leading zeros in the direct access code do not have to be entered.
  Example: Enter **"914"** instead of **"00914"**
- If no channel number is entered, channel 1 is accessed automatically.
  Example: Enter **00914** → **Assign process variable** parameter
- If a different channel is accessed: Enter the direct access code with the corresponding channel number.
  Example: Enter **00914-2** → **Assign process variable** parameter

For the direct access codes of the individual parameters, see the "Description of Device Parameters" document for the device

8.3.8 Calling up help text

Help text is available for some parameters and can be called up from the navigation view. The help text provides a brief explanation of the parameter function and thereby supports swift and safe commissioning.

Calling up and closing the help text

The user is in the navigation view and the selection bar is on a parameter.

1. Press E for 2 s.
   ↳ The help text for the selected parameter opens.

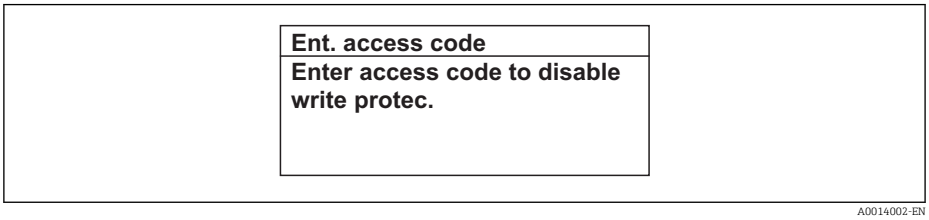

23 Example: Help text for parameter "Enter access code"

2. Press − + + simultaneously.
   ↳ The help text is closed.

8.3.9 Changing the parameters

Parameters can be changed via the numeric editor or text editor.
- Numeric editor: Change values in a parameter, e.g. specifications for limit values.
- Text editor: Enter text in a parameter, e.g. tag name.

A message is displayed if the value entered is outside the permitted value range.

Ent. access code
Invalid or out of range input value Min:0 Max:9999

A0014049-EN

For a description of the editing view - consisting of the text editor and numeric editor - with symbols → 49, for a description of the operating elements → 51

8.3.10 User roles and related access authorization

The two user roles "Operator" and "Maintenance" have different write access to the parameters if the customer defines a user-specific access code. This protects the device configuration via the local display from unauthorized access → 120.

Defining access authorization for user roles

An access code is not yet defined when the device is delivered from the factory. Access authorization (read and write access) to the device is not restricted and corresponds to the "Maintenance" user role.

- Define the access code.
  - The "Operator" user role is redefined in addition to the "Maintenance" user role. Access authorization differs for the two user roles.

Access authorization to parameters: "Maintenance" user role

Access code status	Read access	Write access
An access code has not yet been defined (factory setting).	✔	✔
After an access code has been defined.	✔	✔ [1]

1) The user only has write access after entering the access code.

Access authorization to parameters: "Operator" user role

Access code status	Read access	Write access
After an access code has been defined.	✔	-- [1]

1) Despite the defined access code, certain parameters can always be modified and thus are excepted from the write protection, as they do not affect the measurement. Refer to the "Write protection via access code" section

The user role with which the user is currently logged on is indicated by the **Access status** parameter. Navigation path: Operation → Access status

8.3.11 Disabling write protection via access code

If the 🔒-symbol appears on the local display in front of a parameter, the parameter is write-protected by a user-specific access code and its value cannot be changed at the moment using local operation → 120.

Parameter write protection via local operation can be disabled by entering the user-specific access code in the **Enter access code** parameter (→ 106) via the respective access option.

1. After you press E, the input prompt for the access code appears.

2. Enter the access code.
   ↳ The 🔒-symbol in front of the parameters disappears; all previously write-protected parameters are now re-enabled.

8.3.12 Enabling and disabling the keypad lock

The keypad lock makes it possible to block access to the entire operating menu via local operation. As a result, it is no longer possible to navigate through the operating menu or change the values of individual parameters. Users can only read the measured values on the operational display.

The keypad lock is switched on and off via the context menu.

Switching on the keypad lock

The keypad lock is switched on automatically:
- If the device has not been operated via the display for > 1 minute.
- Each time the device is restarted.

To activate the keylock manually:

1. The device is in the measured value display.
   Press the ⊟ and Ⓔ keys for 3 seconds.
   ↳ A context menu appears.
2. In the context menu select the **Keylock on** option.
   ↳ The keypad lock is switched on.

If the user attempts to access the operating menu while the keypad lock is active, the **Keylock on** message appears.

Switching off the keypad lock

- The keypad lock is switched on.
  Press the ⊟ and Ⓔ keys for 3 seconds.
  ↳ The keypad lock is switched off.

8.4 Access to the operating menu via the Web browser

8.4.1 Function range

Thanks to the integrated Web server, the device can be operated and configured via a Web browser and via a service interface (CDI-RJ45) or via a WLAN interface. The structure of the operating menu is the same as for the local display. In addition to the measured values, status information on the device is also displayed and allows the user to monitor the status of the device. Furthermore the device data can be managed and the network parameters can be configured.

A device that has a WLAN interface (can be ordered as an option) is required for the WLAN connection: order code for "Display; operation", option G "4-line, illuminated; touch control + WLAN". The device acts as an Access Point and enables communication by computer or a mobile handheld terminal.

For additional information on the Web server, refer to the Special Documentation for the device → 📄 194

8.4.2 Prerequisites

Computer hardware

Hardware	Interface	
	CDI-RJ45	WLAN
Interface	The computer must have an RJ45 interface.	The operating unit must have a WLAN interface.
Connection	Standard Ethernet cable with RJ45 connector.	Connection via Wireless LAN.
Screen	Recommended size: ≥12" (depends on the screen resolution)	

Computer software

Software	Interface	
	CDI-RJ45	WLAN

Recommended operating systems	▪ Microsoft Windows 7 or higher.
	▪ Mobile operating systems:
	  ▪ iOS
	  ▪ Android
	Microsoft Windows XP is supported.	

Web browsers supported	▪ Microsoft Internet Explorer 8 or higher ▪ Microsoft Edge ▪ Mozilla Firefox ▪ Google Chrome ▪ Safari	

Computer settings

Settings	Interface	
	CDI-RJ45	WLAN
User rights	Appropriate user rights (e.g. administrator rights) for TCP/IP and proxy server settings are necessary (for adjusting the IP address, subnet mask etc.).	
Proxy server settings of the Web browser	The Web browser setting *Use a Proxy Server for Your LAN* must be **deselected** .	
JavaScript	JavaScript must be enabled. If JavaScript cannot be enabled: enter http://192.168.1.212/basic.html in the address line of the Web browser. A fully functional but simplified version of the operating menu structure starts in the Web browser. When installing a new firmware version: To enable correct data display, clear the temporary memory (cache) of the Web browser under **Internet options**.	
Network connections	Only the active network connections to the measuring device should be used.	
	Switch off all other network connections such as WLAN.	Switch off all other network connections.

In the event of connection problems: → 136

Measuring device: Via CDI-RJ45 service interface

Device	CDI-RJ45 service interface
Measuring device	The measuring device has an RJ45 interface.
Web server	Web server must be enabled; factory setting: ON For information on enabling the Web server → 62

Measuring device: via WLAN interface

Device	WLAN interface
Measuring device	The measuring device has a WLAN antenna: ▪ Transmitter with integrated WLAN antenna ▪ Transmitter with external WLAN antenna
Web server	Web server and WLAN must be enabled; factory setting: ON For information on enabling the Web server → 62

8.4.3 Establishing a connection

Via service interface (CDI-RJ45)

Preparing the measuring device

1. Depending on the housing version:
   Release the securing clamp or securing screw of the housing cover.
2. Depending on the housing version:
   Unscrew or open the housing cover.
3. The location of the connection socket depends on the measuring device and the communication protocol:
   Connect the computer to the RJ45 connector via the standard Ethernet connecting cable .

Configuring the Internet protocol of the computer

The following information refers to the default Ethernet settings of the device.

IP address of the device: 192.168.1.212 (factory setting)

1. Switch on the measuring device.
2. Connect to the computer using a cable → 64.
3. If a 2nd network card is not used, close all the applications on the notebook.
   ↳ Applications requiring Internet or a network, such as e-mail, SAP applications, Internet or Windows Explorer.
4. Close any open Internet browsers.
5. Configure the properties of the Internet protocol (TCP/IP) as defined in the table:

IP address	192.168.1.XXX; for XXX all numerical sequences except: 0, 212 and 255 → e.g. 192.168.1.213
Subnet mask	255.255.255.0
Default gateway	192.168.1.212 or leave cells empty

Via WLAN interface

Configuring the Internet protocol of the mobile terminal

NOTICE

If the WLAN connection is lost during the configuration, settings made may be lost.

- Make sure that the WLAN connection is not disconnected while configuring the device.

NOTICE

In principle, avoid simultaneous access to the measuring device via the service interface (CDI-RJ45) and the WLAN interface from the same mobile terminal. This could cause a network conflict.

- Only activate one service interface (CDI-RJ45 service interface or WLAN interface).
- If simultaneous communication is necessary: configure different IP address ranges, e.g. 192.168.0.1 (WLAN interface) and 192.168.1.212 (CDI-RJ45 service interface).

Preparing the mobile terminal

- Enable WLAN reception on the mobile terminal.

Establishing a connection from the mobile terminal to the measuring device

1. In the WLAN settings of the mobile terminal:
   Select the measuring device using the SSID (e.g. EH_Promass_300_A802000).
2. If necessary, select the WPA2 encryption method.
3. Enter the password: serial number of the measuring device ex-works (e.g. L100A802000).
   ↳ LED on display module flashes: it is now possible to operate the measuring device with the Web browser, FieldCare or DeviceCare.

The serial number can be found on the nameplate.

To ensure the safe and swift assignment of the WLAN network to the measuring point, it is advisable to change the SSID name. It should be possible to clearly assign the new SSID name to the measuring point (e.g. tag name) because it is displayed as the WLAN network.

Disconnecting

- After configuring the device:
  Terminate the WLAN connection between the operating unit and measuring device.

Starting the Web browser

1. Start the Web browser on the computer.

2. Enter the IP address of the Web server in the address line of the Web browser: 192.168.1.212
   ↳ The login page appears.

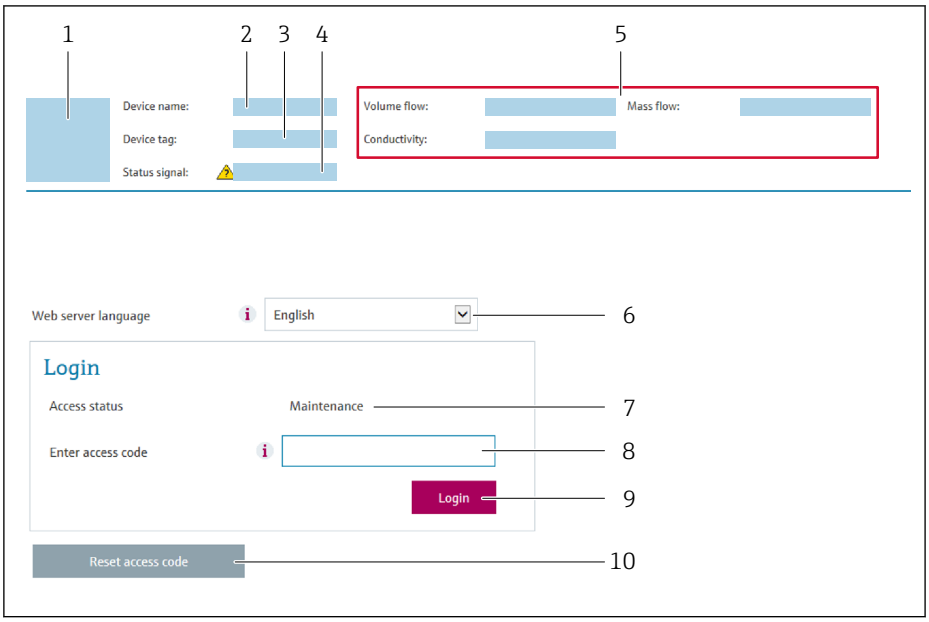

1 *Picture of device*
2 *Device name*
3 *Device tag (→ 📄 78)*
4 *Status signal*
5 *Current measured values*
6 *Operating language*
7 *User role*
8 *Access code*
9 *Login*
10 *Reset access code (→ 📄 117)*

If a login page does not appear, or if the page is incomplete → 📄 136

8.4.4 Logging on

1. Select the preferred operating language for the Web browser.
2. Enter the user-specific access code.
3. Press **OK** to confirm your entry.

Access code	0000 (factory setting); can be changed by customer

If no action is performed for 10 minutes, the Web browser automatically returns to the login page.

8.4.5 User interface

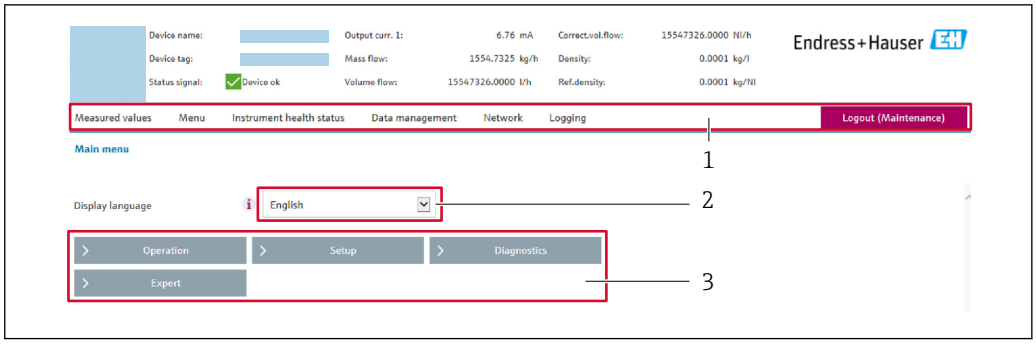

A0029418

1 *Function row*
2 *Local display language*
3 *Navigation area*

Header

The following information appears in the header:
- Device name
- Device tag
- Device status with status signal → 142
- Current measured values

Function row

Functions	Meaning
Measured values	Displays the measured values of the measuring device
Menu	▪ Access to the operating menu from the measuring device ▪ The structure of the operating menu is the same as for the local display For detailed information on the structure of the operating menu, see the Operating Instructions for the measuring device
Device status	Displays the diagnostic messages currently pending, listed in order of priority

Data management	Data exchange between PC and measuring device:
	▪ Device configuration:
	  ▪ Load settings from the device (XML format, save configuration)
	  ▪ Save settings to the device (XML format, restore configuration)
	▪ Logbook - Export Event logbook (.csv file)
	▪ Documents - Export documents:
	  ▪ Export backup data record (.csv file, create documentation of the measuring point configuration)
	  ▪ Verification report (PDF file, only available with the "Heartbeat Verification" application package)
	▪ Firmware update - Flashing a firmware version

Network configuration	Configuration and checking of all the parameters required for establishing the connection to the measuring device: ▪ Network settings (e.g. IP address, MAC address) ▪ Device information (e.g. serial number, firmware version)
Logout	End the operation and call up the login page

Navigation area

If a function is selected in the function bar, the submenus of the function open in the navigation area. The user can now navigate through the menu structure.

Working area

Depending on the selected function and the related submenus, various actions can be performed in this area:
- Configuring parameters
- Reading measured values
- Calling up help text
- Starting an upload/download

8.4.6 Disabling the Web server

The Web server of the measuring device can be switched on and off as required using the **Web server functionality** parameter.

Navigation

"Expert" menu → Communication → Web server

Parameter overview with brief description

Parameter	Description	Selection	Factory setting
Web server functionality	Switch the Web server on and off.	▪ Off ▪ HTML Off ▪ On	On

Function scope of the "Web server functionality" parameter

Option	Description
Off	▪ The web server is completely disabled. ▪ Port 80 is locked.
On	▪ The complete functionality of the web server is available. ▪ JavaScript is used. ▪ The password is transferred in an encrypted state. ▪ Any change to the password is also transferred in an encrypted state.

Enabling the Web server

If the Web server is disabled it can only be re-enabled with the **Web server functionality** parameter via the following operating options:
- Via local display
- Via Bedientool "FieldCare"
- Via "DeviceCare" operating tool

8.4.7 Logging out

Before logging out, perform a data backup via the **Data management** function (upload configuration from device) if necessary.

1. Select the **Logout** entry in the function row.
   ↳ The home page with the Login box appears.
2. Close the Web browser.
3. If no longer needed:
   Reset modified properties of the Internet protocol (TCP/IP) → 📄 58.

8.5 Access to the operating menu via the operating tool

The structure of the operating menu in the operating tools is the same as for operation via the local display.

8.5.1 Connecting the operating tool

Via HART protocol

This communication interface is available in device versions with a HART output.

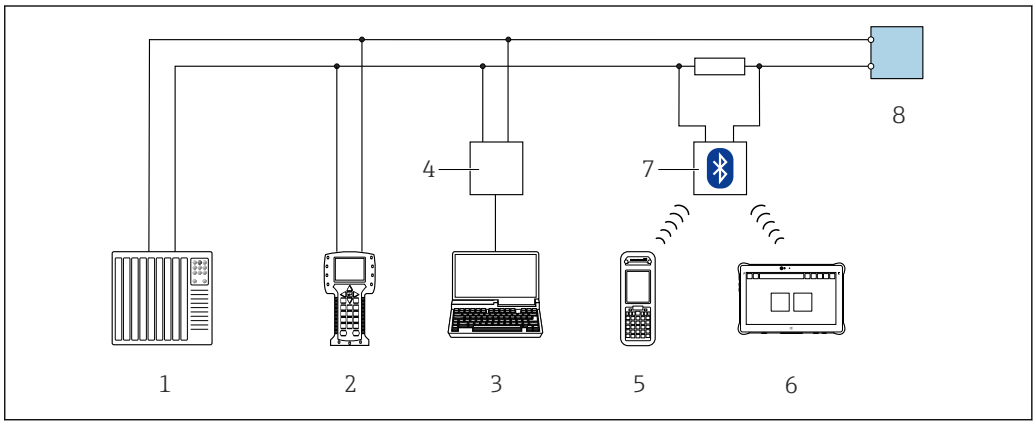

24 Options for remote operation via HART protocol (active)

1 *Control system (e.g. PLC)*
2 *Field Communicator 475*
3 *Computer with Web browser (e.g. Internet Explorer) for access to the integrated device Web server or computer with an operating tool (e.g. FieldCare, DeviceCare, AMS Device Manager, SIMATIC PDM) with COM DTM "CDI Communication TCP/IP"*
4 *Commubox FXA195 (USB)*
5 *Field Xpert SFX350 or SFX370*
6 *Field Xpert SMT70*
7 *VIATOR Bluetooth modem with connecting cable*
8 *Transmitter*

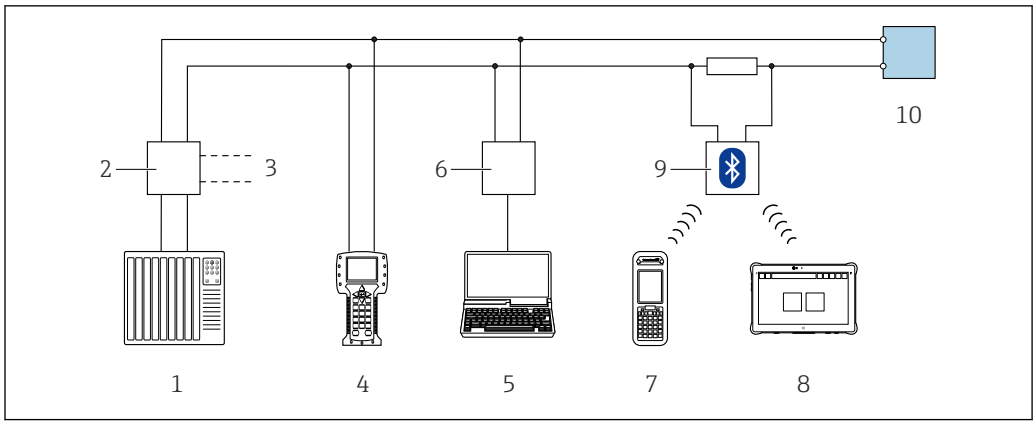

25 *Options for remote operation via HART protocol (passive)*

1 *Control system (e.g. PLC)*
2 *Transmitter power supply unit, e.g. RN221N (with communication resistor)*
3 *Connection for Commubox FXA195 and Field Communicator 475*
4 *Field Communicator 475*
5 *Computer with Web browser (e.g. Internet Explorer) for access to the integrated device Web server or computer with an operating tool (e.g. FieldCare, DeviceCare, AMS Device Manager, SIMATIC PDM) with COM DTM "CDI Communication TCP/IP"*
6 *Commubox FXA195 (USB)*
7 *Field Xpert SFX350 or SFX370*
8 *Field Xpert SMT70*
9 *VIATOR Bluetooth modem with connecting cable*
10 *Transmitter*

Service interface

Via service interface (CDI-RJ45)

A point-to-point connection can be established to configure the device onsite. With the housing open, the connection is established directly via the service interface (CDI-RJ45) of the device.

An adapter for RJ45 and the M12 connector is optionally available:
Order code for "Accessories", option **NB**: "Adapter RJ45 M12 (service interface)"

The adapter connects the service interface (CDI-RJ45) to an M12 connector mounted in the cable entry. Therefore the connection to the service interface can be established via an M12 connector without opening the device.

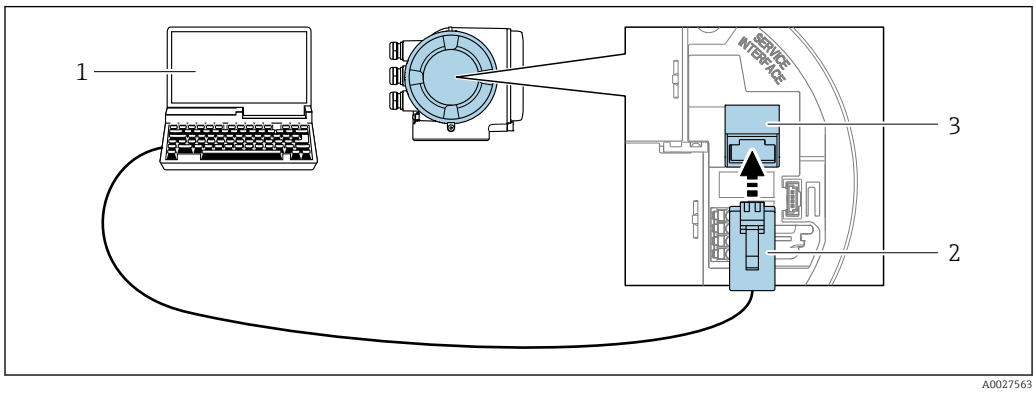

26 *Connection via service interface (CDI-RJ45)*

1 *Computer with Web browser (e.g. Microsoft Internet Explorer, Microsoft Edge) for accessing the integrated device Web server or with "FieldCare", "DeviceCare" operating tool with COM DTM "CDI Communication TCP/IP"*
2 *Standard Ethernet connecting cable with RJ45 connector*
3 *Service interface (CDI-RJ45) of the measuring device with access to the integrated Web server*

Via WLAN interface

The optional WLAN interface is available on the following device version:
Order code for "Display; operation", option G "4-line, illuminated; touch control + WLAN"

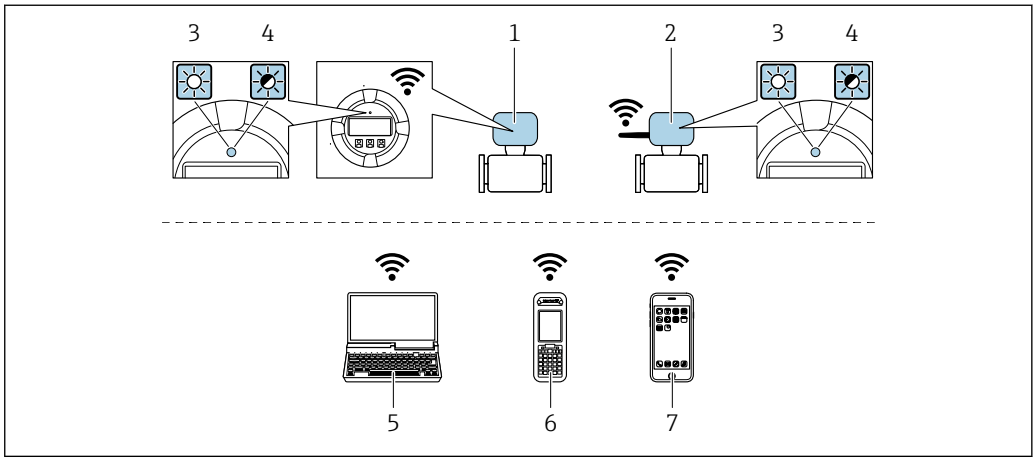

1 *Transmitter with integrated WLAN antenna*
2 *Transmitter with external WLAN antenna*
3 *LED lit constantly: WLAN reception is enabled on measuring device*
4 *LED flashing: WLAN connection established between operating unit and measuring device*
5 *Computer with WLAN interface and Web browser (e.g. Microsoft Internet Explorer, Microsoft Edge) for accessing the integrated device Web server or with operating tool (e.g. FieldCare, DeviceCare)*
6 *Mobile handheld terminal with WLAN interface and Web browser (e.g. Microsoft Internet Explorer, Microsoft Edge) for accessing the integrated device Web server or operating tool (e.g. FieldCare, DeviceCare)*
7 *Smart phone or tablet (e.g. Field Xpert SMT70)*

Function	WLAN: IEEE 802.11 b/g (2.4 GHz)
Encryption	WPA2-PSK AES-128 (in accordance with IEEE 802.11i)
Configurable WLAN channels	1 to 11
Degree of protection	IP67
Available antennas	▪ Internal antenna ▪ External antenna (optional) In the event of poor transmission/reception conditions at the place of installation. Only one antenna active in each case!
Range	▪ Internal antenna: typically 10 m (32 ft) ▪ External antenna: typically 50 m (164 ft)
Materials (external antenna)	▪ Antenna: ASA plastic (acrylic ester-styrene-acrylonitrile) and nickel-plated brass ▪ Adapter: Stainless steel and nickel-plated brass ▪ Cable: Polyethylene ▪ Connector: Nickel-plated brass ▪ Angle bracket: Stainless steel

Configuring the Internet protocol of the mobile terminal

NOTICE

If the WLAN connection is lost during the configuration, settings made may be lost.

▶ Make sure that the WLAN connection is not disconnected while configuring the device.

NOTICE

In principle, avoid simultaneous access to the measuring device via the service interface (CDI-RJ45) and the WLAN interface from the same mobile terminal. This could cause a network conflict.

- Only activate one service interface (CDI-RJ45 service interface or WLAN interface).
- If simultaneous communication is necessary: configure different IP address ranges, e.g. 192.168.0.1 (WLAN interface) and 192.168.1.212 (CDI-RJ45 service interface).

Preparing the mobile terminal

- Enable WLAN reception on the mobile terminal.

Establishing a connection from the mobile terminal to the measuring device

1. In the WLAN settings of the mobile terminal:
   Select the measuring device using the SSID (e.g. EH_Promass_300_A802000).
2. If necessary, select the WPA2 encryption method.
3. Enter the password: serial number of the measuring device ex-works (e.g. L100A802000).
   ↳ LED on display module flashes: it is now possible to operate the measuring device with the Web browser, FieldCare or DeviceCare.

The serial number can be found on the nameplate.

To ensure the safe and swift assignment of the WLAN network to the measuring point, it is advisable to change the SSID name. It should be possible to clearly assign the new SSID name to the measuring point (e.g. tag name) because it is displayed as the WLAN network.

Disconnecting

- After configuring the device:
  Terminate the WLAN connection between the operating unit and measuring device.

8.5.2 Field Xpert SFX350, SFX370

Function range

Field Xpert SFX350 and Field Xpert SFX370 are mobile computers for commissioning and maintenance. They enable efficient device configuration and diagnostics for HART and FOUNDATION Fieldbus devices in the **non-hazardous area** (SFX350, SFX370) and **hazardous area** (SFX370).

For details, see Operating Instructions BA01202S

Source for device description files

See information → 📄 70

8.5.3 FieldCare

Function scope

FDT-based plant asset management tool from Endress+Hauser. It can configure all smart field devices in a system and helps you manage them. By using the status information, it is also a simple but effective way of checking their status and condition.

Access is via:
- HART protocol
- CDI-RJ45 service interface → 64
- WLAN interface→ 65

Typical functions:
- Configuring parameters of transmitters
- Loading and saving device data (upload/download)
- Documentation of the measuring point
- Visualization of the measured value memory (line recorder) and event logbook

For additional information about FieldCare, see Operating Instructions BA00027S and BA00059S

Source for device description files

See information → 70

Establishing a connection

1. Start FieldCare and launch the project.
2. In the network: Add a device.
   ↳ The **Add device** window opens.
3. Select the **CDI Communication TCP/IP** option from the list and press **OK** to confirm.
4. Right-click **CDI Communication TCP/IP** and select the **Add device** option in the context menu that opens.
5. Select the desired device from the list and press **OK** to confirm.
   ↳ The **CDI Communication TCP/IP (Configuration)** window opens.
6. Enter the device address in the **IP address** field: 192.168.1.212 and press **Enter** to confirm.
7. Establish the online connection to the device.

For additional information, see Operating Instructions BA00027S and BA00059S

User interface

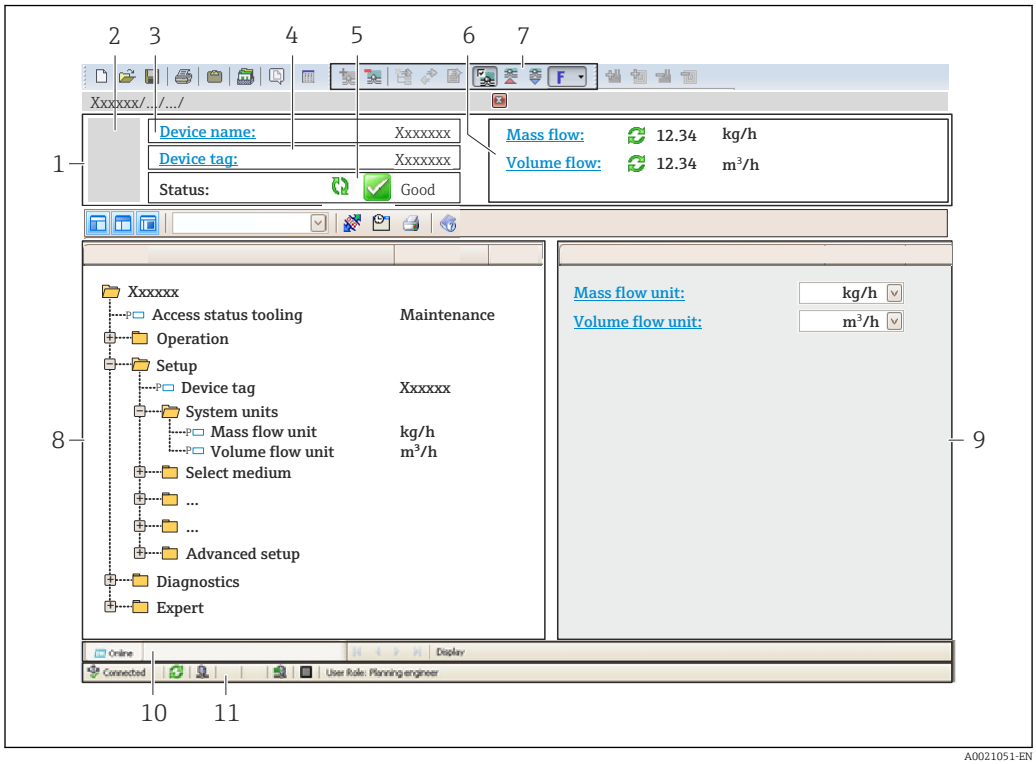

A0021051-EN

1 *Header*
2 *Picture of device*
3 *Device name*
4 *Device tag*
5 *Status area with status signal→ 142*
6 *Display area for current measured values*
7 *Edit toolbar with additional functions such as save/restore, event list and create documentation*
8 *Navigation area with operating menu structure*
9 *Working area*
10 *Range of action*
11 *Status area*

8.5.4 DeviceCare

Function scope

Tool to connect and configure Endress+Hauser field devices.

The fastest way to configure Endress+Hauser field devices is with the dedicated "DeviceCare" tool. Together with the device type managers (DTMs) it presents a convenient, comprehensive solution.

For details, see Innovation Brochure IN01047S

Source for device description files

See information → 70

8.5.5 AMS Device Manager

Function scope

Program from Emerson Process Management for operating and configuring measuring devices via HART protocol.

Source for device description files

See data → 🗎 70

8.5.6 SIMATIC PDM

Function scope

SIMATIC PDM is a standardized, manufacturer-independent program from Siemens for the operation, configuration, maintenance and diagnosis of intelligent field devices via HART protocol.

Source for device description files

See data → 🗎 70

8.5.7 Field Communicator 475

Function scope

Industrial handheld terminal from Emerson Process Management for remote configuration and measured value display via HART protocol.

Source for device description files

See data → 🗎 70

9 System integration

9.1 Overview of device description files

9.1.1 Current version data for the device

Firmware version	01.05.zz	▪ On the title page of the Operating Instructions ▪ On the transmitter nameplate ▪ Firmware version Diagnostics → Device information → Firmware version
Release date of firmware version	08.2019	---
Manufacturer ID	0x11	Manufacturer ID Diagnostics → Device information → Manufacturer ID
Device type ID	0x3B	Device type Diagnostics → Device information → Device type
HART protocol revision	7	---
Device revision	1	▪ On the transmitter nameplate ▪ Device revision Diagnostics → Device information → Device revision

For an overview of the different firmware versions for the device → 📖 156

9.1.2 Operating tools

The suitable device description file for the individual operating tools is listed in the table below, along with information on where the file can be acquired.

Operating tool via HART protocol	Sources for obtaining device descriptions
FieldCare	▪ www.endress.com → Download Area ▪ CD-ROM (contact Endress+Hauser) ▪ DVD (contact Endress+Hauser)
DeviceCare	▪ www.endress.com → Download Area ▪ CD-ROM (contact Endress+Hauser) ▪ DVD (contact Endress+Hauser)
▪ Field Xpert SFX350 ▪ Field Xpert SFX370	Use update function of handheld terminal
AMS Device Manager (Emerson Process Management)	www.endress.com → Download Area
SIMATIC PDM (Siemens)	www.endress.com → Download Area
Field Communicator 475 (Emerson Process Management)	Use update function of handheld terminal

9.2 Measured variables via HART protocol

The following measured variables (HART device variables) are assigned to the dynamic variables at the factory:

Dynamic variables	Measured variables (HART device variables)
Primary dynamic variable (PV)	Mass flow
Secondary dynamic variable (SV)	Totalizer 1
Tertiary dynamic variable (TV)	Density
Quaternary dynamic variable (QV)	Temperature

The assignment of the measured variables to the dynamic variables can be modified and assigned as desired via local operation and the operating tool using the following parameters:

- Expert → Communication → HART output → Output → Assign PV
- Expert → Communication → HART output → Output → Assign SV
- Expert → Communication → HART output → Output → Assign TV
- Expert → Communication → HART output → Output → Assign QV

The following measured variables can be assigned to the dynamic variables:

Measured variables for PV (primary dynamic variable)

- Measured variables which are generally available:
  - Mass flow
  - Volume flow
  - Corrected volume flow
  - Density
  - Reference density
  - Temperature
  - Electronic temperature
  - Oscillation frequency 0
  - Frequency fluctuation 0
  - Oscillation damping 0
  - Oscillation damping fluctuation 0
  - Signal asymmetry
  - Exciter current 0
  - Pressure [2)]
- Additional measured variables with the Heartbeat Verification + Monitoring application package:
  - Carrier pipe temperature [2)]
  - Oscillation frequency 1
  - Oscillation amplitude
  - Oscillation amplitude 1
  - Frequency fluctuation 1
  - Oscillation damping 1
  - Oscillation damping fluctuation 1
  - Exciter current 1
  - HBSI
- Additional measured variables with the Concentration application package:
  - Concentration
  - Target mass flow
  - Carrier mass flow
  - Target volume flow
  - Carrier volume flow
  - Target corrected volume flow
  - Carrier corrected volume flow

2) Visible depending on the order options or device settings

Measured variables for SV, TV, QV (secondary, tertiary and quaternary dynamic variable)

- Measured variables which are always available:
  - Mass flow
  - Volume flow
  - Corrected volume flow
  - Density
  - Reference density
  - Temperature
  - Electronic temperature
  - Totalizer 1
  - Totalizer 2
  - Totalizer 3
- Additional measured variables with the Heartbeat Verification + Monitoring application package:
  - Carrier pipe temperature
  - HBSI
- Additional measured variables with the Concentration application package:
  - Concentration
  - Target mass flow
  - Carrier mass flow
  - Target volume flow
  - Carrier volume flow
  - Target corrected volume flow
  - Carrier corrected volume flow

9.2.1 Device variables

Device variables are permanently assigned. A maximum of eight device variables can be transmitted.

Assignment	Device variables
0	Mass flow
1	Volume flow
2	Corrected volume flow
3	Density
4	Reference density
5	Temperature
6	Totalizer 1
7	Totalizer 2
8	Totalizer 3
13	Target mass flow [1)]
14	Carrier mass flow [1)]
15	Concentration [1)]

1) Visible depending on the order options or device settings

9.3 Other settings

Burst mode functionality in accordance with HART 7 Specification:

Navigation
"Expert" menu → Communication → HART output → Burst configuration → Burst configuration 1 to n

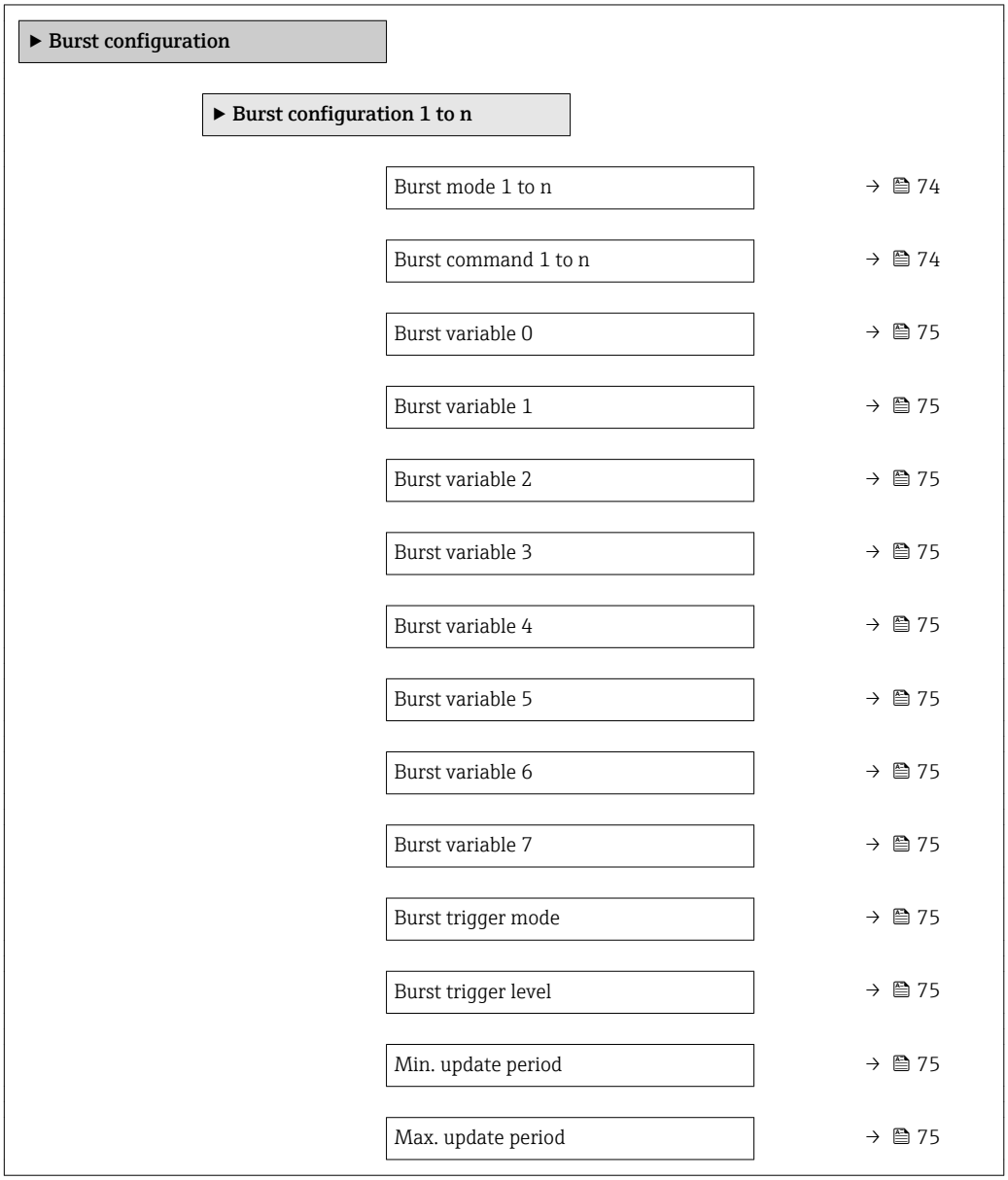

Parameter overview with brief description

Parameter	Description	Selection / User entry	Factory setting
Burst mode 1 to n	Activate the HART burst mode for burst message X.	▪ Off ▪ On	Off
Burst command 1 to n	Select the HART command that is sent to the HART master.	▪ Command 1 ▪ Command 2 ▪ Command 3 ▪ Command 9 ▪ Command 33 ▪ Command 48	Command 2

Parameter	Description	Selection / User entry	Factory setting
Burst variable 0	For HART command 9 and 33: select the HART device variable or the process variable.	▪ Mass flow ▪ Volume flow ▪ Corrected volume flow * ▪ Target mass flow * ▪ Carrier mass flow * ▪ Density ▪ Reference density * ▪ Concentration * ▪ Temperature ▪ Totalizer 1 ▪ Totalizer 2 ▪ Totalizer 3 ▪ HBSI * ▪ HART input ▪ Percent of range ▪ Measured current ▪ Primary variable (PV) ▪ Secondary variable (SV) ▪ Tertiary variable (TV) ▪ Quaternary variable (QV) ▪ Not used ▪ Target volume flow * ▪ Carrier volume flow * ▪ Target corrected volume flow * ▪ Carrier corrected volume flow *	Volume flow
Burst variable 1	For HART command 9 and 33: select the HART device variable or the process variable.	See the **Burst variable 0** parameter.	Not used
Burst variable 2	For HART command 9 and 33: select the HART device variable or the process variable.	See the **Burst variable 0** parameter.	Not used
Burst variable 3	For HART command 9 and 33: select the HART device variable or the process variable.	See the **Burst variable 0** parameter.	Not used
Burst variable 4	For HART command 9: select the HART device variable or the process variable.	See the **Burst variable 0** parameter.	Not used
Burst variable 5	For HART command 9: select the HART device variable or the process variable.	See the **Burst variable 0** parameter.	Not used
Burst variable 6	For HART command 9: select the HART device variable or the process variable.	See the **Burst variable 0** parameter.	Not used
Burst variable 7	For HART command 9: select the HART device variable or the process variable.	See the **Burst variable 0** parameter.	Not used
Burst trigger mode	Select the event that triggers burst message X.	▪ Continuous ▪ Window * ▪ Rising * ▪ Falling * ▪ On change	Continuous
Burst trigger level	Enter the burst trigger value. Together with the option selected in the **Burst trigger mode** parameter the burst trigger value determines the time of burst message X.	Signed floating-point number	–
Min. update period	Enter the minimum time span between two burst commands of burst message X.	Positive integer	1 000 ms
Max. update period	Enter the maximum time span between two burst commands of burst message X.	Positive integer	2 000 ms

* Visibility depends on order options or device settings

10 Commissioning

10.1 Function check

Before commissioning the measuring device:

▶ Make sure that the post-installation and post-connection checks have been performed.

- "Post-installation check" checklist→ 📄 30
- "Post-connection check" checklist → 📄 42

10.2 Switching on the measuring device

▶ After a successful function check, switch on the measuring device.
  ↳ After a successful startup, the local display switches automatically from the startup display to the operational display.

ℹ If nothing appears on the local display or a diagnostic message is displayed, refer to the section on "Diagnostics and troubleshooting" → 📄 135.

10.3 Setting the operating language

Factory setting: English or ordered local language

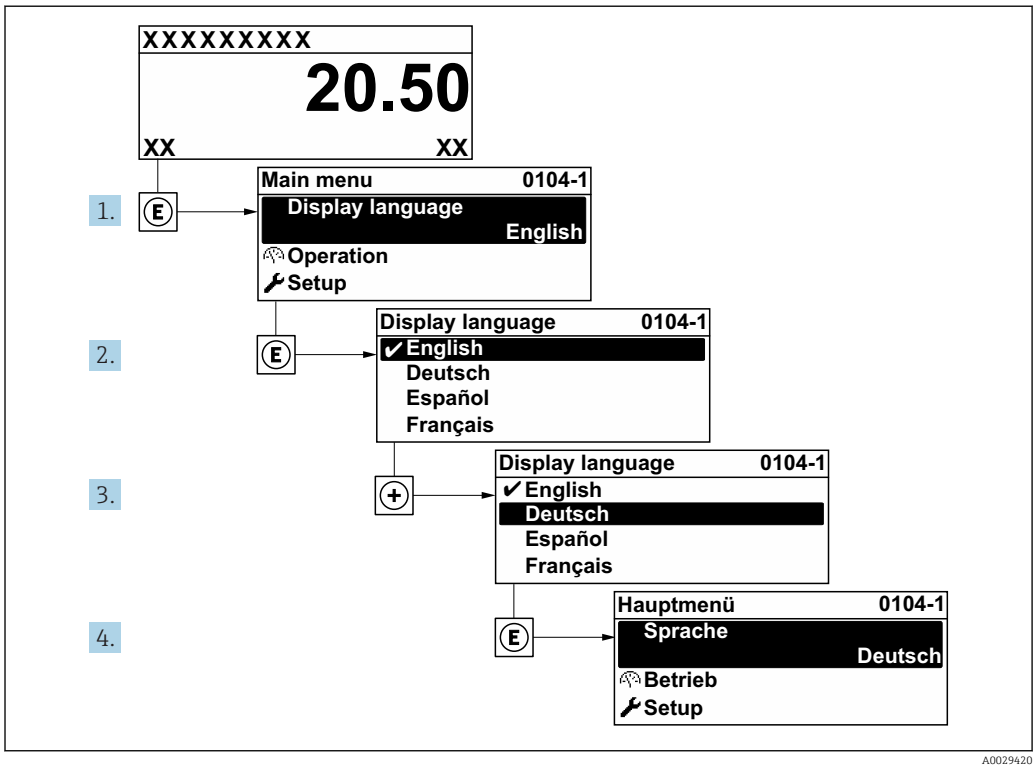

27 *Taking the example of the local display*

10.4 Configuring the measuring device

- The **Setup** menu with its guided wizards contains all the parameters needed for standard operation.
- Navigation to the **Setup** menu

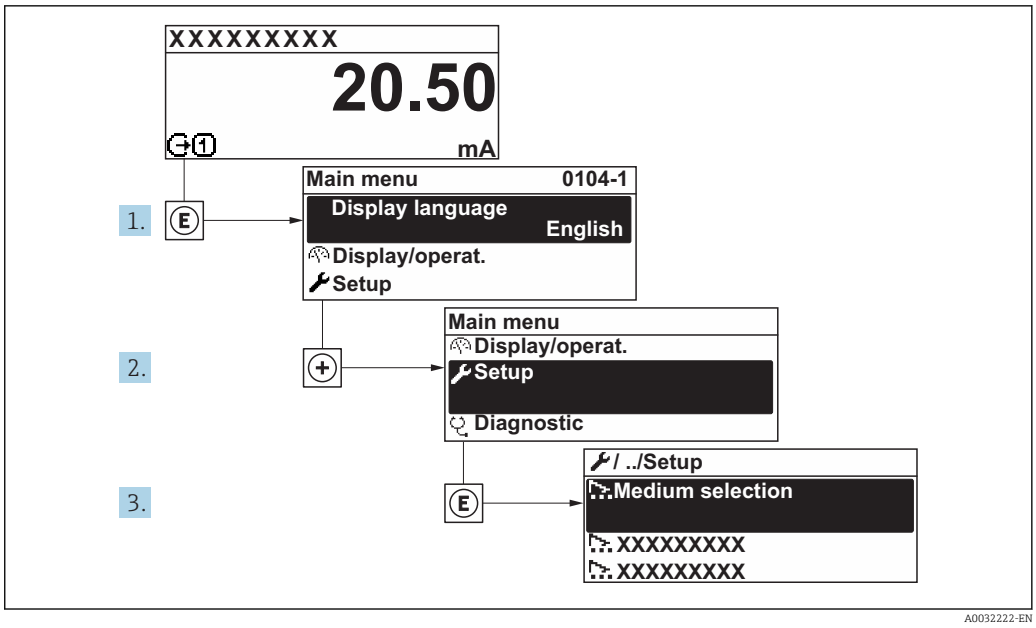

28 *Taking the example of the local display*

The number of submenus and parameters can vary depending on the device version. Certain submenus and parameters in these submenus are not described in the Operation Instructions. Instead a description is provided in the Special Documentation for the device (→ "Supplementary documentation" section).

Setup

Device tag	→ 78
▶ System units	→ 78
▶ Medium selection	→ 81
▶ I/O configuration	→ 82
▶ Current input 1 to n	→ 83
▶ Status input 1 to n	→ 85
▶ Current output 1 to n	→ 85
▶ Pulse/frequency/switch output 1 to n	→ 89
▶ Relay output 1 to n	→ 96
▶ Double pulse output	→ 98
▶ Display	→ 99
▶ Low flow cut off	→ 103

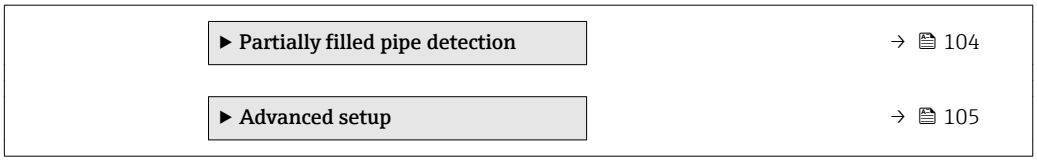

10.4.1 Defining the tag name

To enable fast identification of the measuring point within the system, you can enter a unique designation using the **Device tag** parameter and thus change the factory setting.

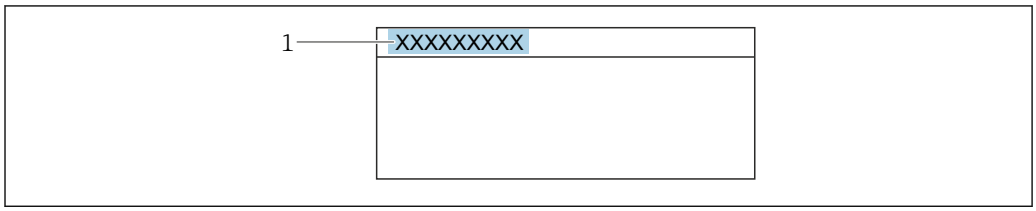

29 Header of the operational display with tag name

1 Tag name

Enter the tag name in the "FieldCare" operating tool → 68

Navigation
"Setup" menu → Device tag

Parameter overview with brief description

Parameter	Description	User entry	Factory setting
Device tag	Enter the name for the measuring point.	Max. 32 characters, such as letters, numbers or special characters (e.g. @, %, /).	Promass

10.4.2 Setting the system units

In the **System units** submenu the units of all the measured values can be set.

The number of submenus and parameters can vary depending on the device version. Certain submenus and parameters in these submenus are not described in the Operation Instructions. Instead a description is provided in the Special Documentation for the device (→ "Supplementary documentation" section).

Navigation
"Setup" menu → System units

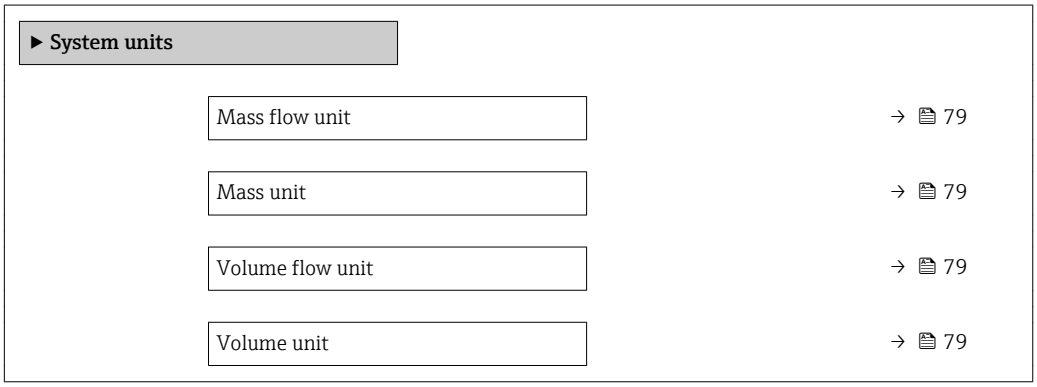

Corrected volume flow unit	→ 🗎 79
Corrected volume unit	→ 🗎 79
Density unit	→ 🗎 79
Reference density unit	→ 🗎 79
Temperature unit	→ 🗎 80
Pressure unit	→ 🗎 80

Parameter overview with brief description

Parameter	Description	Selection	Factory setting
Mass flow unit	Select mass flow unit. *Result* The selected unit applies for: ▪ Output ▪ Low flow cut off ▪ Simulation process variable	Unit choose list	Country-specific: ▪ kg/h ▪ lb/min
Mass unit	Select mass unit.	Unit choose list	Country-specific: ▪ kg ▪ lb
Volume flow unit	Select volume flow unit. *Result* The selected unit applies for: ▪ Output ▪ Low flow cut off ▪ Simulation process variable	Unit choose list	Country-specific: ▪ l/h ▪ gal/min (us)
Volume unit	Select volume unit.	Unit choose list	Country-specific: ▪ l ▪ gal (us)
Corrected volume flow unit	Select corrected volume flow unit. *Result* The selected unit applies for: **Corrected volume flow** parameter (→ 🗎 124)	Unit choose list	Country-specific: ▪ Nl/h ▪ Sft^3/min
Corrected volume unit	Select corrected volume unit.	Unit choose list	Country-specific: ▪ Nl ▪ Sft^3
Density unit	Select density unit. *Result* The selected unit applies for: ▪ Output ▪ Simulation process variable ▪ Density adjustment (**Expert** menu)	Unit choose list	Country-specific: ▪ kg/l ▪ lb/ft^3
Reference density unit	Select reference density unit.	Unit choose list	Country-dependent ▪ kg/Nl ▪ lb/Sft^3

Parameter	Description	Selection	Factory setting
Temperature unit	Select temperature unit. *Result* The selected unit applies for: ▪ **Electronic temperature** parameter (6053) ▪ **Maximum value** parameter (6051) ▪ **Minimum value** parameter (6052) ▪ **External temperature** parameter (6080) ▪ **Maximum value** parameter (6108) ▪ **Minimum value** parameter (6109) ▪ **Maximum value** parameter (6029) ▪ **Minimum value** parameter (6030) ▪ **Reference temperature** parameter (1816) ▪ **Temperature** parameter	Unit choose list	Country-specific: ▪ °C ▪ °F
Pressure unit	Select process pressure unit. *Result* The unit is taken from: ▪ **Pressure value** parameter (→ 🗎 82) ▪ **External pressure** parameter (→ 🗎 82) ▪ Pressure value	Unit choose list	Country-specific: ▪ bar a ▪ psi a

10.4.3 Selecting and setting the medium

The **Select medium** wizard submenu contains parameters that must be configured in order to select and set the medium.

Navigation
"Setup" menu → Select medium

▶ **Medium selection**	
Select medium	→ 82
Select gas type	→ 82
Reference sound velocity	→ 82
Temperature coefficient sound velocity	→ 82
Pressure compensation	→ 82
Pressure value	→ 82
External pressure	→ 82

Parameter overview with brief description

Parameter	Prerequisite	Description	Selection / User entry / User interface	Factory setting
Select medium	–	Select medium type.	▪ Liquid ▪ Gas	Liquid
Select gas type	The **Gas** option is selected in the **Select medium** parameter.	Select measured gas type.	▪ Air ▪ Ammonia NH3 ▪ Argon Ar ▪ Sulfur hexafluoride SF6 ▪ Oxygen O2 ▪ Ozone O3 ▪ Nitrogen oxide NOx ▪ Nitrogen N2 ▪ Nitrous oxide N2O ▪ Methane CH4 ▪ Hydrogen H2 ▪ Helium He ▪ Hydrogen chloride HCl ▪ Hydrogen sulfide H2S ▪ Ethylene C2H4 ▪ Carbon dioxide CO2 ▪ Carbon monoxide CO ▪ Chlorine Cl2 ▪ Butane C4H10 ▪ Propane C3H8 ▪ Propylene C3H6 ▪ Ethane C2H6 ▪ Others	Methane CH4
Reference sound velocity	In the **Select gas type** parameter, the **Others** option is selected.	Enter sound velocity of gas at 0 °C (32 °F).	1 to 99 999.9999 m/s	415.0 m/s
Temperature coefficient sound velocity	The **Others** option is selected in the **Select gas type** parameter.	Enter temperature coefficient for the gas sound velocity.	Positive floating-point number	0 (m/s)/K
Pressure compensation	–	Select pressure compensation type.	▪ Off ▪ Fixed value ▪ External value * ▪ Current input 1 * ▪ Current input 2 *	Off
Pressure value	The **Fixed value** option or the **Current input 1…n** option is selected in the **Pressure compensation** parameter.	Enter process pressure to be used for pressure correction.	Positive floating-point number	1.01325 bar
External pressure	The **Fixed value** option or the **Current input 1…n** option is selected in the **Pressure compensation** parameter.	Shows the external process pressure value.	Positive floating-point number	1.01325 bar

* Visibility depends on order options or device settings

10.4.4 Displaying the I/O configuration

The **I/O configuration** submenu guides the user systematically through all the parameters in which the configuration of the I/O modules is displayed.

Navigation
"Setup" menu → I/O configuration

▶ I/O configuration	
I/O module 1 to n terminal numbers	→ 📄 83
I/O module 1 to n information	→ 📄 83
I/O module 1 to n type	→ 📄 83
Apply I/O configuration	→ 📄 83
I/O alteration code	→ 📄 83

Parameter overview with brief description

Parameter	Description	User interface / Selection / User entry	Factory setting
I/O module 1 to n terminal numbers	Shows the terminal numbers used by the I/O module.	▪ Not used ▪ 26-27 (I/O 1) ▪ 24-25 (I/O 2) ▪ 22-23 (I/O 3)	–
I/O module 1 to n information	Shows information of the plugged I/O module.	▪ Not plugged ▪ Invalid ▪ Not configurable ▪ Configurable ▪ HART	–
I/O module 1 to n type	Shows the I/O module type.	▪ Off ▪ Current output * ▪ Current input * ▪ Status input * ▪ Pulse/frequency/switch output * ▪ Double pulse output * ▪ Relay output *	Off
Apply I/O configuration	Apply parameterization of the freely configurable I/O module.	▪ No ▪ Yes	No
I/O alteration code	Enter the code in order to change the I/O configuration.	Positive integer	0

* Visibility depends on order options or device settings

10.4.5 Configuring the current input

The **"Current input" wizard** guides the user systematically through all the parameters that have to be set for configuring the current input.

Navigation
"Setup" menu → Current input

▶ Current input 1 to n	
Terminal number	→ 📄 84
Signal mode	→ 📄 84
0/4 mA value	→ 📄 84
20 mA value	→ 📄 84
Current span	→ 📄 84
Failure mode	→ 📄 84
Failure value	→ 📄 84

Parameter overview with brief description

Parameter	Prerequisite	Description	User interface / Selection / User entry	Factory setting
Terminal number	–	Shows the terminal numbers used by the current input module.	▪ Not used ▪ 24-25 (I/O 2) ▪ 22-23 (I/O 3)	–
Signal mode	The measuring device is **not** approved for use in the hazardous area with type of protection Ex-i.	Select the signal mode for the current input.	▪ Passive ▪ Active *	Active
0/4 mA value	–	Enter 4 mA value.	Signed floating-point number	0
20 mA value	–	Enter 20 mA value.	Signed floating-point number	Depends on country and nominal diameter
Current span	–	Select current range for process value output and upper/lower level for alarm signal.	▪ 4...20 mA (4...20.5 mA) ▪ 4...20 mA NAMUR (3.8...20.5 mA) ▪ 4...20 mA US (3.9...20.8 mA) ▪ 0...20 mA (0...20.5 mA)	Country-specific: ▪ 4...20 mA NAMUR (3.8...20.5 mA) ▪ 4...20 mA US (3.9...20.8 mA)
Failure mode	–	Define input behavior in alarm condition.	▪ Alarm ▪ Last valid value ▪ Defined value	Alarm
Failure value	In the **Failure mode** parameter, the **Defined value** option is selected.	Enter value to be used by the device if input value from external device is missing.	Signed floating-point number	0

* Visibility depends on order options or device settings

10.4.6 Configuring the status input

The **Status input** submenu guides the user systematically through all the parameters that have to be set for configuring the status input.

Navigation
"Setup" menu → Status input

▶ **Status input 1 to n**

Assign status input	→ 📄 85
Terminal number	→ 📄 85
Active level	→ 📄 85
Terminal number	→ 📄 85
Response time status input	→ 📄 85
Terminal number	→ 📄 85

Parameter overview with brief description

Parameter	Description	User interface / Selection / User entry	Factory setting
Terminal number	Shows the terminal numbers used by the status input module.	▪ Not used ▪ 24-25 (I/O 2) ▪ 22-23 (I/O 3)	–
Assign status input	Select function for the status input.	▪ Off ▪ Reset totalizer 1 ▪ Reset totalizer 2 ▪ Reset totalizer 3 ▪ Reset all totalizers ▪ Flow override ▪ Zero point adjustment	Off
Active level	Define input signal level at which the assigned function is triggered.	▪ High ▪ Low	High
Response time status input	Define the minimum amount of time the input signal level must be present before the selected function is triggered.	5 to 200 ms	50 ms

10.4.7 Configuring the current output

The **Current output** wizard guides you systematically through all the parameters that have to be set for configuring the current output.

Navigation
"Setup" menu → Current output

▶ **Current output 1 to n**

Terminal number	→ 📄 86

Signal mode	→ 86
Assign current output 1 to n	→ 87
Current span	→ 87
0/4 mA value	→ 87
20 mA value	→ 88
Fixed current	→ 88
Damping output 1 to n	→ 88
Failure mode	→ 88
Failure current	→ 88

Parameter overview with brief description

Parameter	Prerequisite	Description	User interface / Selection / User entry	Factory setting
Terminal number	–	Shows the terminal numbers used by the current output module.	▪ Not used ▪ 26-27 (I/O 1) ▪ 24-25 (I/O 2) ▪ 22-23 (I/O 3)	–
Signal mode	–	Select the signal mode for the current output.	▪ Active * ▪ Passive *	Active

Parameter	Prerequisite	Description	User interface / Selection / User entry	Factory setting
Assign current output 1 to n	–	Select process variable for current output.	▪ Off * ▪ Mass flow ▪ Volume flow ▪ Corrected volume flow * ▪ Target mass flow * ▪ Carrier mass flow * ▪ Target volume flow * ▪ Carrier volume flow * ▪ Target corrected volume flow * ▪ Carrier corrected volume flow * ▪ Density ▪ Reference density * ▪ Concentration * ▪ Temperature ▪ Carrier pipe temperature * ▪ Electronic temperature ▪ Oscillation frequency 0 ▪ Oscillation amplitude 0 * ▪ Frequency fluctuation 0 * ▪ Oscillation damping 0 * ▪ Oscillation damping fluctuation 0 * ▪ Signal asymmetry * ▪ Exciter current 0 * ▪ HBSI * ▪ Pressure * ▪ Application specific output 0 * ▪ Application specific output 1 * ▪ Index inhomogeneous medium ▪ Index suspended bubbles *	Mass flow
Current span	–	Select current range for process value output and upper/lower level for alarm signal.	▪ 4...20 mA NAMUR (3.8...20.5 mA) ▪ 4...20 mA US (3.9...20.8 mA) ▪ 4...20 mA (4... 20.5 mA) ▪ 0...20 mA (0... 20.5 mA) ▪ Fixed current	Country-specific: ▪ 4...20 mA NAMUR (3.8...20.5 mA) ▪ 4...20 mA US (3.9...20.8 mA)
0/4 mA value	In the **Current span** parameter (→ 🗎 87), one of the following options is selected: ▪ 4...20 mA NAMUR (3.8...20.5 mA) ▪ 4...20 mA US (3.9...20.8 mA) ▪ 4...20 mA (4... 20.5 mA) ▪ 0...20 mA (0... 20.5 mA)	Enter 4 mA value.	Signed floating-point number	Country-specific: ▪ 0 kg/h ▪ 0 lb/min

Parameter	Prerequisite	Description	User interface / Selection / User entry	Factory setting
20 mA value	One of the following options is selected in the **Current span** parameter (→ 🗎 87): ▪ 4...20 mA NAMUR (3.8...20.5 mA) ▪ 4...20 mA US (3.9...20.8 mA) ▪ 4...20 mA (4... 20.5 mA) ▪ 0...20 mA (0... 20.5 mA)	Enter 20 mA value.	Signed floating-point number	Depends on country and nominal diameter
Fixed current	The **Fixed current** option is selected in the **Current span** parameter (→ 🗎 87).	Defines the fixed output current.	0 to 22.5 mA	22.5 mA
Damping output 1 to n	A process variable is selected in the **Assign current output** parameter (→ 🗎 87) and one of the following options is selected in the **Current span** parameter (→ 🗎 87): ▪ 4...20 mA NAMUR (3.8...20.5 mA) ▪ 4...20 mA US (3.9...20.8 mA) ▪ 4...20 mA (4... 20.5 mA) ▪ 0...20 mA (0... 20.5 mA)	Set reaction time for output signal to fluctuations in the measured value.	0.0 to 999.9 s	1.0 s
Failure mode	A process variable is selected in the **Assign current output** parameter (→ 🗎 87) and one of the following options is selected in the **Current span** parameter (→ 🗎 87): ▪ 4...20 mA NAMUR (3.8...20.5 mA) ▪ 4...20 mA US (3.9...20.8 mA) ▪ 4...20 mA (4... 20.5 mA) ▪ 0...20 mA (0... 20.5 mA)	Define output behavior in alarm condition.	▪ Min. ▪ Max. ▪ Last valid value ▪ Actual value ▪ Defined value	Max.
Failure current	The **Defined value** option is selected in the **Failure mode** parameter.	Enter current output value in alarm condition.	0 to 22.5 mA	22.5 mA

* Visibility depends on order options or device settings

10.4.8 Configuring the pulse/frequency/switch output

The **Pulse/frequency/switch output** wizard guides you systematically through all the parameters that can be set for configuring the selected output type.

Navigation
"Setup" menu → Advanced setup → Pulse/frequency/switch output

▶ **Pulse/frequency/switch output 1 to n**

Operating mode → 📄 89

Parameter overview with brief description

Parameter	Description	Selection	Factory setting
Operating mode	Define the output as a pulse, frequency or switch output.	▪ Pulse ▪ Frequency ▪ Switch	Pulse

Configuring the pulse output

Navigation
"Setup" menu → Pulse/frequency/switch output

▶ **Pulse/frequency/switch output 1 to n**

Operating mode → 📄 90

Terminal number → 📄 90

Signal mode → 📄 90

Assign pulse output → 📄 90

Value per pulse → 📄 90

Pulse width → 📄 90

Failure mode → 📄 90

Invert output signal → 📄 90

Parameter overview with brief description

Parameter	Prerequisite	Description	Selection / User interface / User entry	Factory setting
Operating mode	–	Define the output as a pulse, frequency or switch output.	▪ Pulse ▪ Frequency ▪ Switch	Pulse
Terminal number	–	Shows the terminal numbers used by the PFS output module.	▪ Not used ▪ 24-25 (I/O 2) ▪ 22-23 (I/O 3)	–
Signal mode	–	Select the signal mode for the PFS output.	▪ Passive ▪ Active ▪ Passive NAMUR	Passive
Assign pulse output 1 to n	The **Pulse** option is selected in the **Operating mode** parameter parameter.	Select process variable for pulse output.	▪ Off ▪ Mass flow ▪ Volume flow ▪ Corrected volume flow * ▪ Target mass flow * ▪ Carrier mass flow * ▪ Target volume flow * ▪ Carrier volume flow * ▪ Target corrected volume flow * ▪ Carrier corrected volume flow *	Off
Pulse scaling	The **Pulse** option is selected in the **Operating mode** parameter (→ 🗎 89) and a process variable is selected in the **Assign pulse output** parameter (→ 🗎 90).	Enter quantity for measured value at which a pulse is output.	Positive floating point number	Depends on country and nominal diameter
Pulse width	The **Pulse** option is selected in the **Operating mode** parameter (→ 🗎 89) and a process variable is selected in the **Assign pulse output** parameter (→ 🗎 90).	Define time width of the output pulse.	0.05 to 2 000 ms	100 ms
Failure mode	The **Pulse** option is selected in the **Operating mode** parameter (→ 🗎 89) and a process variable is selected in the **Assign pulse output** parameter (→ 🗎 90).	Define output behavior in alarm condition.	▪ Actual value ▪ No pulses	No pulses
Invert output signal	–	Invert the output signal.	▪ No ▪ Yes	No

* Visibility depends on order options or device settings

Configuring the frequency output

Navigation
"Setup" menu → Pulse/frequency/switch output

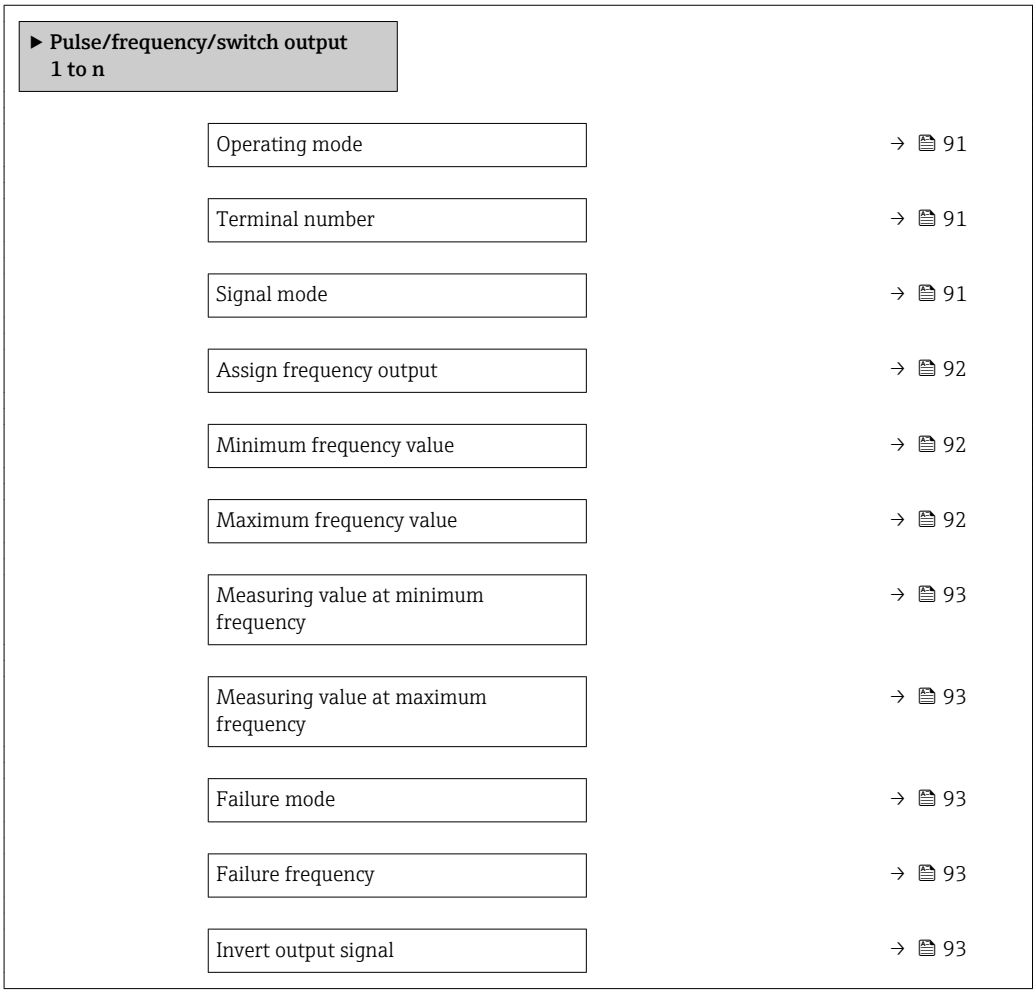

Parameter overview with brief description

Parameter	Prerequisite	Description	Selection / User interface / User entry	Factory setting
Operating mode	–	Define the output as a pulse, frequency or switch output.	▪ Pulse ▪ Frequency ▪ Switch	Pulse
Terminal number	–	Shows the terminal numbers used by the PFS output module.	▪ Not used ▪ 24-25 (I/O 2) ▪ 22-23 (I/O 3)	–
Signal mode	–	Select the signal mode for the PFS output.	▪ Passive ▪ Active ▪ Passive NAMUR	Passive

Parameter	Prerequisite	Description	Selection / User interface / User entry	Factory setting
Assign frequency output	The **Frequency** option is selected in the **Operating mode** parameter (→ 🗎 89).	Select process variable for frequency output.	▪ Off ▪ Mass flow ▪ Volume flow ▪ Corrected volume flow ▪ Target mass flow * ▪ Carrier mass flow * ▪ Target volume flow * ▪ Carrier volume flow * ▪ Target corrected volume flow * ▪ Carrier corrected volume flow * ▪ Density ▪ Reference density ▪ Concentration * ▪ Temperature ▪ Carrier pipe temperature * ▪ Electronic temperature ▪ Oscillation frequency 0 ▪ Oscillation amplitude 0 * ▪ Frequency fluctuation 0 * ▪ Oscillation damping 0 * ▪ Oscillation damping fluctuation 0 * ▪ Signal asymmetry * ▪ Exciter current 0 * ▪ HBSI * ▪ Pressure ▪ Application specific output 0 * ▪ Application specific output 1 * ▪ Index inhomogeneous medium ▪ Index suspended bubbles *	Off
Minimum frequency value	The **Frequency** option is selected in the **Operating mode** parameter (→ 🗎 89) and a process variable is selected in the **Assign frequency output** parameter (→ 🗎 92).	Enter minimum frequency.	0.0 to 10 000.0 Hz	0.0 Hz
Maximum frequency value	The **Frequency** option is selected in the **Operating mode** parameter (→ 🗎 89) and a process variable is selected in the **Assign frequency output** parameter (→ 🗎 92).	Enter maximum frequency.	0.0 to 10 000.0 Hz	10 000.0 Hz

Parameter	Prerequisite	Description	Selection / User interface / User entry	Factory setting
Measuring value at minimum frequency	The **Frequency** option is selected in the **Operating mode** parameter (→ 🗎 89) and a process variable is selected in the **Assign frequency output** parameter (→ 🗎 92).	Enter measured value for minmum frequency.	Signed floating-point number	Depends on country and nominal diameter
Measuring value at maximum frequency	The **Frequency** option is selected in the **Operating mode** parameter (→ 🗎 89) and a process variable is selected in the **Assign frequency output** parameter (→ 🗎 92).	Enter measured value for maximum frequency.	Signed floating-point number	Depends on country and nominal diameter
Failure mode	The **Frequency** option is selected in the **Operating mode** parameter (→ 🗎 89) and a process variable is selected in the **Assign frequency output** parameter (→ 🗎 92).	Define output behavior in alarm condition.	▪ Actual value ▪ Defined value ▪ 0 Hz	0 Hz
Failure frequency	The **Frequency** option is selected in the **Operating mode** parameter (→ 🗎 89) and a process variable is selected in the **Assign frequency output** parameter (→ 🗎 92).	Enter frequency output value in alarm condition.	0.0 to 12 500.0 Hz	0.0 Hz
Invert output signal	–	Invert the output signal.	▪ No ▪ Yes	No

* Visibility depends on order options or device settings

Configuring the switch output

Navigation
"Setup" menu → Pulse/frequency/switch output

▶ **Pulse/frequency/switch output 1 to n**	
Operating mode	→ 📄 94
Terminal number	→ 📄 94
Signal mode	→ 📄 94
Switch output function	→ 📄 95
Assign diagnostic behavior	→ 📄 95
Assign limit	→ 📄 95
Assign flow direction check	→ 📄 95
Assign status	→ 📄 95
Switch-on value	→ 📄 96
Switch-off value	→ 📄 96
Switch-on delay	→ 📄 96
Switch-off delay	→ 📄 96
Failure mode	→ 📄 96
Invert output signal	→ 📄 96

Parameter overview with brief description

Parameter	Prerequisite	Description	Selection / User interface / User entry	Factory setting
Operating mode	–	Define the output as a pulse, frequency or switch output.	▪ Pulse ▪ Frequency ▪ Switch	Pulse
Terminal number	–	Shows the terminal numbers used by the PFS output module.	▪ Not used ▪ 24-25 (I/O 2) ▪ 22-23 (I/O 3)	–
Signal mode	–	Select the signal mode for the PFS output.	▪ Passive ▪ Active ▪ Passive NAMUR	Passive

Parameter	Prerequisite	Description	Selection / User interface / User entry	Factory setting
Switch output function	The **Switch** option is selected in the **Operating mode** parameter.	Select function for switch output.	▪ Off ▪ On ▪ Diagnostic behavior ▪ Limit ▪ Flow direction check ▪ Status	Off
Assign diagnostic behavior	▪ In the **Operating mode** parameter, the **Switch** option is selected. ▪ In the **Switch output function** parameter, the **Diagnostic behavior** option is selected.	Select diagnostic behavior for switch output.	▪ Alarm ▪ Alarm or warning ▪ Warning	Alarm
Assign limit	▪ The **Switch** option is selected in the **Operating mode** parameter. ▪ The **Limit** option is selected in the **Switch output function** parameter.	Select process variable for limit function.	▪ Mass flow ▪ Volume flow ▪ Corrected volume flow * ▪ Target mass flow * ▪ Carrier mass flow * ▪ Target volume flow * ▪ Carrier volume flow * ▪ Target corrected volume flow * ▪ Carrier corrected volume flow * ▪ Density ▪ Reference density * ▪ Concentration * ▪ Temperature ▪ Totalizer 1 ▪ Totalizer 2 ▪ Totalizer 3 ▪ Oscillation damping ▪ Pressure ▪ Application specific output 0 * ▪ Application specific output 1 * ▪ Index inhomogeneous medium ▪ Index suspended bubbles *	Mass flow
Assign flow direction check	▪ The **Switch** option is selected in the **Operating mode** parameter. ▪ The **Flow direction check** option is selected in the **Switch output function** parameter.	Select process variable for flow direction monitoring.	▪ Off ▪ Volume flow ▪ Mass flow ▪ Corrected volume flow *	Mass flow
Assign status	▪ The **Switch** option is selected in the **Operating mode** parameter. ▪ The **Status** option is selected in the **Switch output function** parameter.	Select device status for switch output.	▪ Partially filled pipe detection ▪ Low flow cut off	Partially filled pipe detection

Parameter	Prerequisite	Description	Selection / User interface / User entry	Factory setting
Switch-on value	▪ The **Switch** option is selected in the **Operating mode** parameter. ▪ The **Limit** option is selected in the **Switch output function** parameter.	Enter measured value for the switch-on point.	Signed floating-point number	Country-specific: ▪ 0 kg/h ▪ 0 lb/min
Switch-off value	▪ The **Switch** option is selected in the **Operating mode** parameter. ▪ The **Limit** option is selected in the **Switch output function** parameter.	Enter measured value for the switch-off point.	Signed floating-point number	Country-specific: ▪ 0 kg/h ▪ 0 lb/min
Switch-on delay	▪ The **Switch** option is selected in the **Operating mode** parameter. ▪ The **Limit** option is selected in the **Switch output function** parameter.	Define delay for the switch-on of status output.	0.0 to 100.0 s	0.0 s
Switch-off delay	▪ The **Switch** option is selected in the **Operating mode** parameter. ▪ The **Limit** option is selected in the **Switch output function** parameter.	Define delay for the switch-off of status output.	0.0 to 100.0 s	0.0 s
Failure mode	–	Define output behavior in alarm condition.	▪ Actual status ▪ Open ▪ Closed	Open
Invert output signal	–	Invert the output signal.	▪ No ▪ Yes	No

* Visibility depends on order options or device settings

10.4.9 Configuring the relay output

The **Relay output** wizard guides the user systematically through all the parameters that have to be set for configuring the relay output.

Navigation

"Setup" menu → Relay output 1 to n

▶ **RelaisOutput 1 to n**

Switch output function	→ 📄 97
Assign flow direction check	→ 📄 97
Assign limit	→ 📄 97
Assign diagnostic behavior	→ 📄 97
Assign status	→ 📄 98
Switch-off value	→ 📄 98

Switch-on value	→ 📄 98
Failure mode	→ 📄 98

Parameter overview with brief description

Parameter	Prerequisite	Description	Selection / User interface / User entry	Factory setting
Relay output function	–	Select the function for the relay output.	▪ Closed ▪ Open ▪ Diagnostic behavior ▪ Limit ▪ Flow direction check ▪ Digital Output	Closed
Terminal number	–	Shows the terminal numbers used by the relay output module.	▪ Not used ▪ 24-25 (I/O 2) ▪ 22-23 (I/O 3)	–
Assign flow direction check	In the **Relay output function** parameter, the **Flow direction check** option is selected.	Select process variable for flow direction monitoring.	▪ Off ▪ Volume flow ▪ Mass flow ▪ Corrected volume flow *	Mass flow
Assign limit	The **Limit** option is selected in the **Relay output function** parameter.	Select process variable for limit function.	▪ Mass flow ▪ Volume flow ▪ Corrected volume flow * ▪ Target mass flow * ▪ Carrier mass flow * ▪ Target volume flow * ▪ Carrier volume flow * ▪ Target corrected volume flow * ▪ Carrier corrected volume flow * ▪ Density ▪ Reference density * ▪ Concentration * ▪ Temperature ▪ Totalizer 1 ▪ Totalizer 2 ▪ Totalizer 3 ▪ Oscillation damping ▪ Pressure ▪ Application specific output 0 * ▪ Application specific output 1 * ▪ Index inhomogeneous medium ▪ Index suspended bubbles *	Mass flow
Assign diagnostic behavior	In the **Relay output function** parameter, the **Diagnostic behavior** option is selected.	Select diagnostic behavior for switch output.	▪ Alarm ▪ Alarm or warning ▪ Warning	Alarm

Parameter	Prerequisite	Description	Selection / User interface / User entry	Factory setting
Assign status	In the **Relay output function** parameter, the **Digital Output** option is selected.	Select device status for switch output.	▪ Partially filled pipe detection ▪ Low flow cut off	Partially filled pipe detection
Switch-off value	In the **Relay output function** parameter, the **Limit** option is selected.	Enter measured value for the switch-off point.	Signed floating-point number	Country-specific: ▪ 0 kg/h ▪ 0 lb/min
Switch-off delay	In the **Relay output function** parameter, the **Limit** option is selected.	Define delay for the switch-off of status output.	0.0 to 100.0 s	0.0 s
Switch-on value	The **Limit** option is selected in the **Relay output function** parameter.	Enter measured value for the switch-on point.	Signed floating-point number	Country-specific: ▪ 0 kg/h ▪ 0 lb/min
Switch-on delay	In the **Relay output function** parameter, the **Limit** option is selected.	Define delay for the switch-on of status output.	0.0 to 100.0 s	0.0 s
Failure mode	–	Define output behavior in alarm condition.	▪ Actual status ▪ Open ▪ Closed	Open

* Visibility depends on order options or device settings

10.4.10 Configuring the double pulse output

The **Double pulse output** submenu guides the user systematically through all the parameters that have to be set for configuring the double pulse output.

Navigation

"Setup" menu → Double pulse output

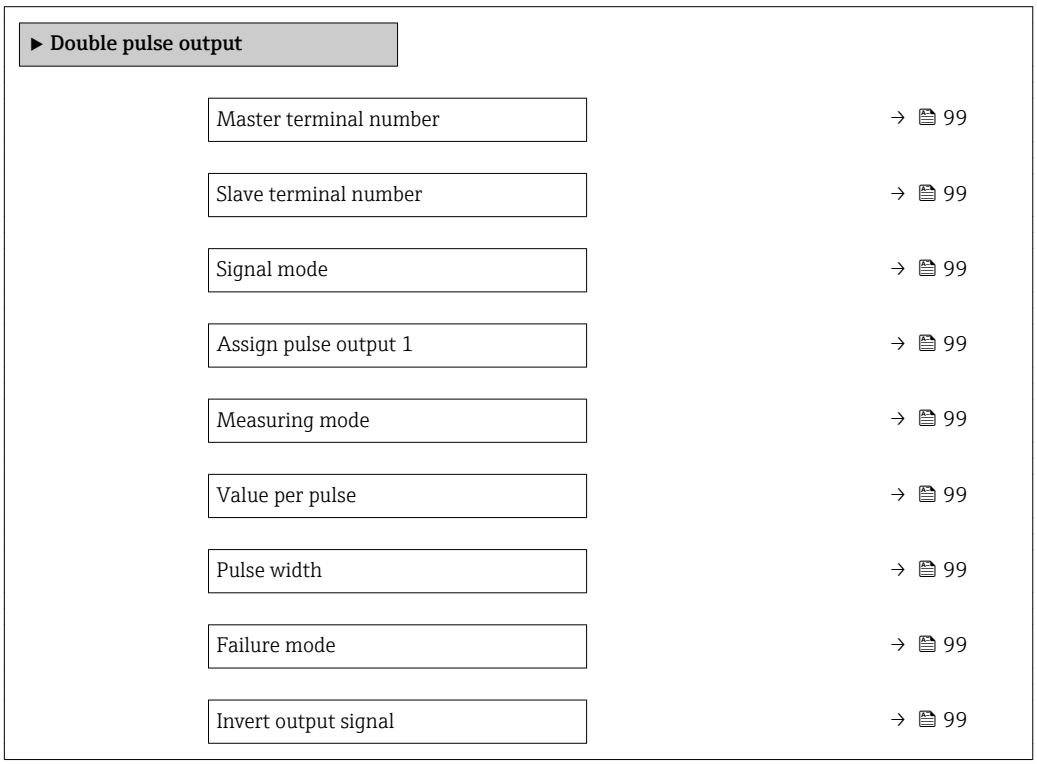

Parameter overview with brief description

Parameter	Description	Selection / User interface / User entry	Factory setting
Signal mode	Select the signal mode for the double pulse output.	▪ Passive ▪ Active ▪ Passive NAMUR	Passive
Master terminal number	Shows the terminal numbers used by the master of the double pulse output module.	▪ Not used ▪ 24-25 (I/O 2) ▪ 22-23 (I/O 3)	–
Slave terminal number	Shows the terminal numbers used by the slave of the double pulse output module.	▪ Not used ▪ 24-25 (I/O 2) ▪ 22-23 (I/O 3)	–
Assign pulse output 1	Select process variable for pulse output.	▪ Off ▪ Mass flow ▪ Volume flow ▪ Corrected volume flow * ▪ Target mass flow * ▪ Carrier mass flow * ▪ Target volume flow * ▪ Carrier volume flow * ▪ Target corrected volume flow * ▪ Carrier corrected volume flow *	Off
Measuring mode	Select measuring mode for pulse output.	▪ Forward flow ▪ Forward/Reverse flow ▪ Reverse flow ▪ Reverse flow compensation	Forward flow
Value per pulse	Enter measured value at which a pulse is output.	Signed floating-point number	Depends on country and nominal diameter
Pulse width	Define time width of the output pulse.	0.5 to 2 000 ms	0.5 ms
Failure mode	Define output behavior in alarm condition.	▪ Actual value ▪ No pulses	No pulses
Invert output signal	Invert the output signal.	▪ No ▪ Yes	No

* Visibility depends on order options or device settings

10.4.11 Configuring the local display

The **Display** wizard guides you systematically through all the parameters that can configured for configuring the local display.

Navigation
"Setup" menu → Display

▶ Display	
Format display	→ 📄 101
Value 1 display	→ 📄 101
0% bargraph value 1	→ 📄 101
100% bargraph value 1	→ 📄 102

Value 2 display	→ 🗎 102
Value 3 display	→ 🗎 102
0% bargraph value 3	→ 🗎 102
100% bargraph value 3	→ 🗎 102
Value 4 display	→ 🗎 102

Parameter overview with brief description

Parameter	Prerequisite	Description	Selection / User entry	Factory setting
Format display	A local display is provided.	Select how measured values are shown on the display.	▪ 1 value, max. size ▪ 1 bargraph + 1 value ▪ 2 values ▪ 1 value large + 2 values ▪ 4 values	1 value, max. size
Value 1 display	A local display is provided.	Select the measured value that is shown on the local display.	▪ Mass flow ▪ Volume flow ▪ Corrected volume flow * ▪ Target mass flow * ▪ Carrier mass flow * ▪ Target volume flow * ▪ Carrier volume flow * ▪ Target corrected volume flow * ▪ Carrier corrected volume flow * ▪ Density ▪ Reference density * ▪ Concentration * ▪ Temperature ▪ Carrier pipe temperature * ▪ Electronic temperature ▪ Oscillation frequency 0 ▪ Oscillation amplitude 0 * ▪ Frequency fluctuation 0 * ▪ Oscillation damping 0 * ▪ Oscillation damping fluctuation 0 * ▪ Signal asymmetry * ▪ Exciter current 0 * ▪ Totalizer 1 ▪ Totalizer 2 ▪ Totalizer 3 ▪ Current output 1 * ▪ Current output 2 * ▪ Current output 3 * ▪ Pressure ▪ Application specific output 1 * ▪ Index inhomogeneous medium ▪ Application specific output 0 * ▪ Index suspended bubbles *	Mass flow
0% bargraph value 1	A local display is provided.	Enter 0% value for bar graph display.	Signed floating-point number	Country-specific: ▪ 0 kg/h ▪ 0 lb/min

Parameter	Prerequisite	Description	Selection / User entry	Factory setting
100% bargraph value 1	A local display is provided.	Enter 100% value for bar graph display.	Signed floating-point number	Depends on country and nominal diameter
Value 2 display	A local display is provided.	Select the measured value that is shown on the local display.	For the picklist, see the **Value 2 display** parameter (→ 🗎 102)	None
Value 3 display	A local display is provided.	Select the measured value that is shown on the local display.	For the picklist, see the **Value 2 display** parameter (→ 🗎 102)	None
0% bargraph value 3	A selection was made in the **Value 3 display** parameter.	Enter 0% value for bar graph display.	Signed floating-point number	Country-specific: ▪ 0 kg/h ▪ 0 lb/min
100% bargraph value 3	A selection was made in the **Value 3 display** parameter.	Enter 100% value for bar graph display.	Signed floating-point number	0
Value 4 display	A local display is provided.	Select the measured value that is shown on the local display.	For the picklist, see the **Value 2 display** parameter (→ 🗎 102)	None

* Visibility depends on order options or device settings

10.4.12 Configuring the low flow cut off

The **Low flow cut off** wizard systematically guides the user through all the parameters that must be set to configure low flow cut off.

Navigation

"Setup" menu → Low flow cut off

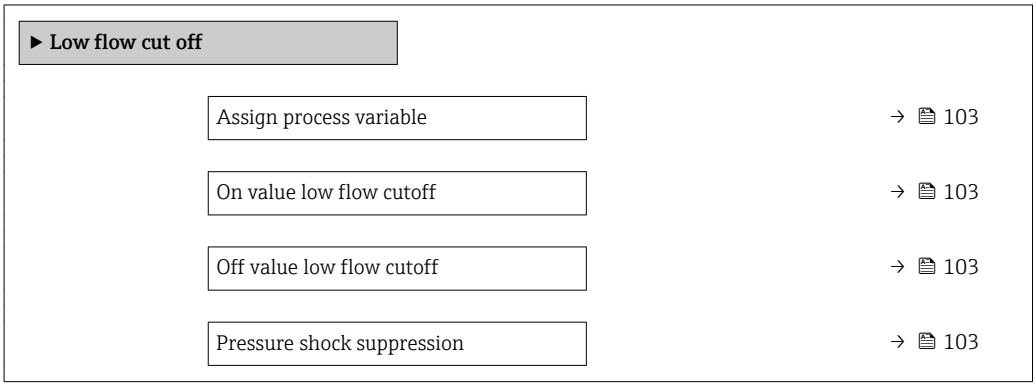

Parameter overview with brief description

Parameter	Prerequisite	Description	Selection / User entry	Factory setting
Assign process variable	–	Select process variable for low flow cut off.	▪ Off ▪ Mass flow ▪ Volume flow ▪ Corrected volume flow *	Mass flow
On value low flow cutoff	A process variable is selected in the **Assign process variable** parameter (→ 🗎 103).	Enter on value for low flow cut off.	Positive floating-point number	Depends on country and nominal diameter
Off value low flow cutoff	A process variable is selected in the **Assign process variable** parameter (→ 🗎 103).	Enter off value for low flow cut off.	0 to 100.0 %	50 %
Pressure shock suppression	A process variable is selected in the **Assign process variable** parameter (→ 🗎 103).	Enter time frame for signal suppression (= active pressure shock suppression).	0 to 100 s	0 s

* Visibility depends on order options or device settings

10.4.13 Configuring the partial filled pipe detection

The **Partial filled pipe detection** wizard guides you systematically through all parameters that have to be set for configuring the monitoring of the pipe filling.

Navigation
"Setup" menu → Partially filled pipe detection

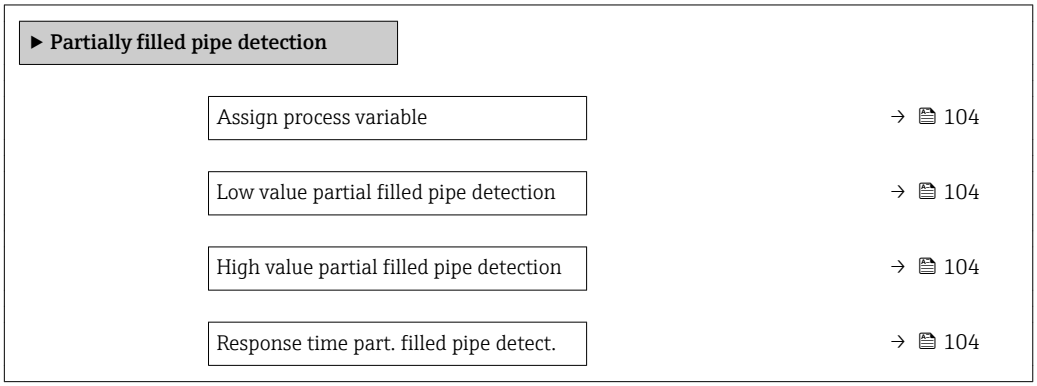

Parameter overview with brief description

Parameter	Prerequisite	Description	Selection / User entry	Factory setting
Assign process variable	–	Select process variable for partially filled pipe detection.	▪ Off ▪ Density ▪ Reference density	Off
Low value partial filled pipe detection	A process variable is selected in the **Assign process variable** parameter (→ 104).	Enter lower limit value for deactivating partialy filled pipe detection.	Signed floating-point number	200
High value partial filled pipe detection	A process variable is selected in the **Assign process variable** parameter (→ 104).	Enter upper limit value for deactivating partialy filled pipe detection.	Signed floating-point number	6 000
Response time part. filled pipe detect.	A process variable is selected in the **Assign process variable** parameter (→ 104).	Enter time before diagnostic message is displayed for partially filled pipe detection.	0 to 100 s	1 s

10.5 Advanced settings

The **Advanced setup** submenu together with its submenus contains parameters for specific settings.

Navigation to the "Advanced setup" submenu

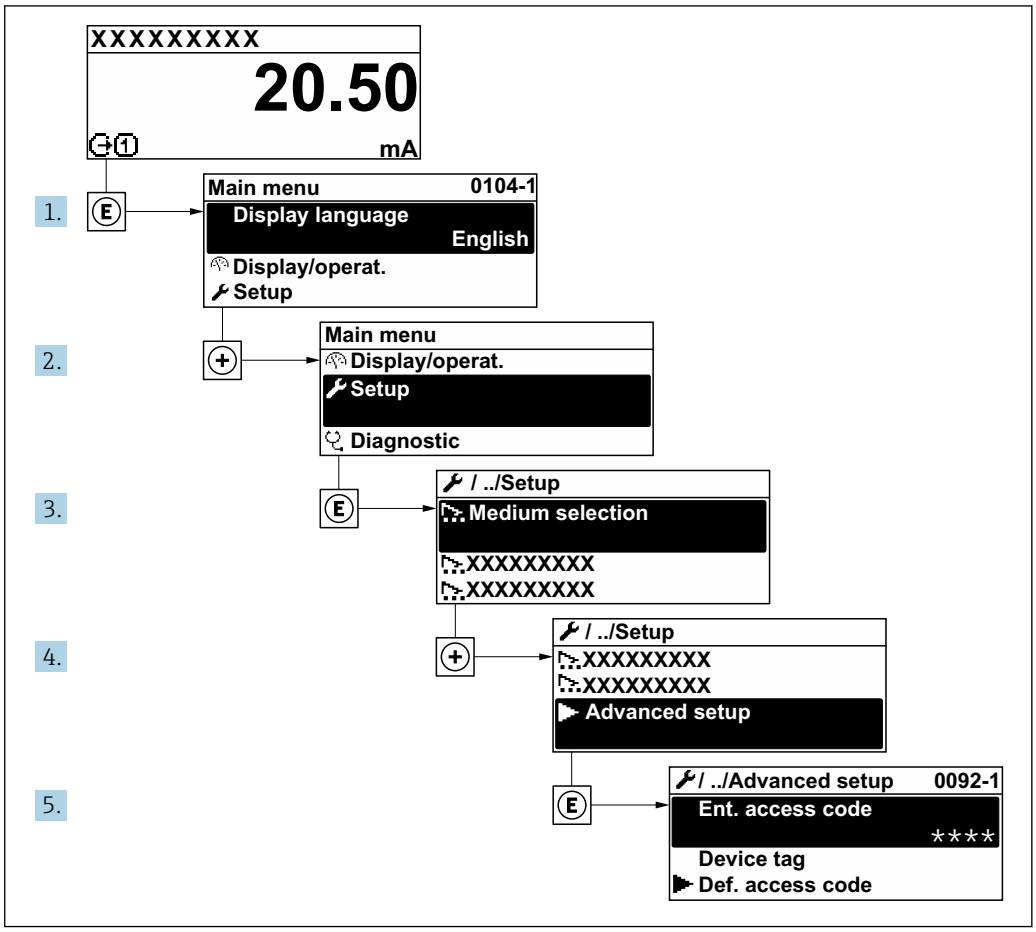

The number of submenus and parameters can vary depending on the device version. Certain submenus and parameters in these submenus are not described in the Operation Instructions. Instead a description is provided in the Special Documentation for the device (→ "Supplementary documentation" section).

Navigation

"Setup" menu → Advanced setup

▶ Advanced setup	
Enter access code	→ 📄 106
▶ Calculated values	→ 📄 106
▶ Sensor adjustment	→ 📄 107
▶ Totalizer 1 to n	→ 📄 108

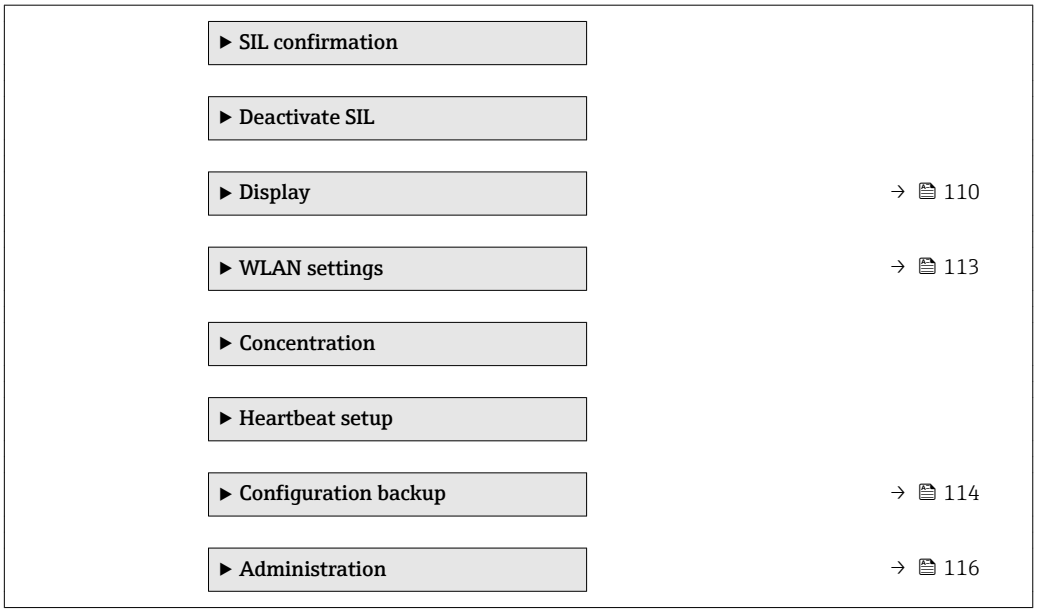

10.5.1 Using the parameter to enter the access code

Navigation
"Setup" menu → Advanced setup

Parameter overview with brief description

Parameter	Description	User entry
Enter access code	Enter access code to disable write protection of parameters.	Max. 16-digit character string comprising numbers, letters and special characters

10.5.2 Calculated values

The **Calculated values** submenu contains parameters for calculating the corrected volume flow.

Navigation
"Setup" menu → Advanced setup → Calculated values

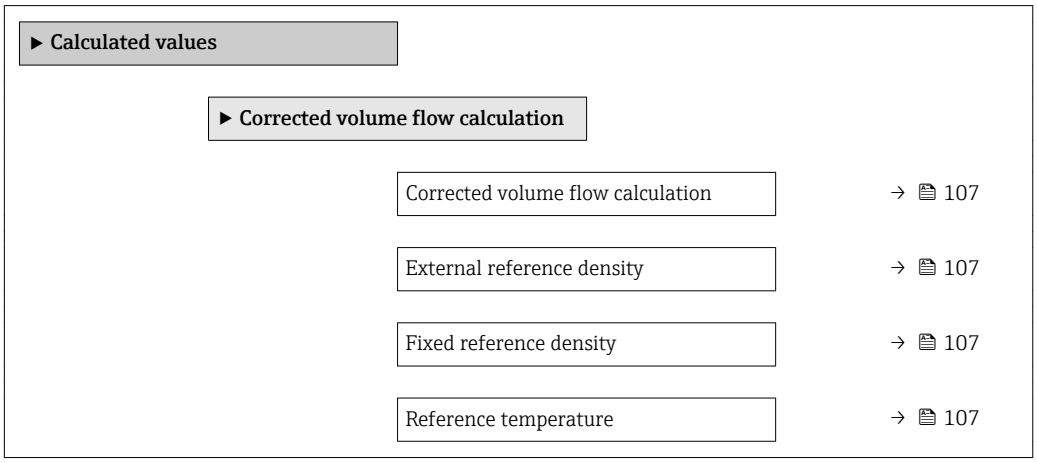

	Linear expansion coefficient	→ 📄 107
	Square expansion coefficient	→ 📄 107

Parameter overview with brief description

Parameter	Prerequisite	Description	Selection / User interface / User entry	Factory setting
Corrected volume flow calculation	–	Select reference density for calculating the corrected volume flow.	▪ Fixed reference density ▪ Calculated reference density ▪ Current input 1 * ▪ Current input 2 *	Calculated reference density
External reference density	One of the following options is selected in the **Corrected volume flow calculation** parameter: ▪ Current input 1 * ▪ Current input 2 *	Shows external reference density.	Floating point number with sign	–
Fixed reference density	The **Fixed reference density** option is selected in the **Corrected volume flow calculation** parameter parameter.	Enter fixed value for reference density.	Positive floating-point number	1 kg/Nl
Reference temperature	The **Calculated reference density** option is selected in the **Corrected volume flow calculation** parameter parameter.	Enter reference temperature for calculating the reference density.	−273.15 to 99 999 °C	Country-specific: ▪ +20 °C ▪ +68 °F
Linear expansion coefficient	The **Calculated reference density** option is selected in the **Corrected volume flow calculation** parameter parameter.	Enter linear, medium-specific expansion coefficient for calculating the reference density.	Signed floating-point number	0.0 1/K
Square expansion coefficient	The **Calculated reference density** option is selected in the **Corrected volume flow calculation** parameter parameter.	For media with a non-linear expansion pattern: enter the quadratic, medium-specific expansion coefficient for calculating the reference density.	Signed floating-point number	0.0 1/K²

* Visibility depends on order options or device settings

10.5.3 Carrying out a sensor adjustment

The **Sensor adjustment** submenu contains parameters that pertain to the functionality of the sensor.

Navigation
"Setup" menu → Advanced setup → Sensor adjustment

▶ **Sensor adjustment**		
	Installation direction	→ 📄 108
	▶ **Zero point adjustment**	→ 📄 108

Parameter overview with brief description

Parameter	Description	Selection	Factory setting
Installation direction	Set sign of flow direction to match the direction of the arrow on the sensor.	▪ Flow in arrow direction ▪ Flow against arrow direction	Flow in arrow direction

Zero point adjustment

All measuring devices are calibrated in accordance with state-of-the-art technology. Calibration takes place under reference conditions→ 📄 174. Therefore, a zero point adjustment in the field is generally not required.

Experience shows that zero point adjustment is advisable only in special cases:
- To achieve maximum measuring accuracy even with low flow rates.
- Under extreme process or operating conditions (e.g. very high process temperatures or very high-viscosity fluids).

Navigation
"Setup" menu → Advanced setup → Sensor adjustment → Zero point adjustment

▶ **Zero point adjustment**		
	Zero point adjustment control	→ 📄 108
	Progress	→ 📄 108

Parameter overview with brief description

Parameter	Description	Selection / User interface	Factory setting
Zero point adjustment control	Start zero point adjustment.	▪ Cancel ▪ Start	Cancel
Progress	Shows the progress of the process.	0 to 100 %	–

10.5.4 Configuring the totalizer

In the **"Totalizer 1 to n" submenu** the individual totalizer can be configured.

Navigation
"Setup" menu → Advanced setup → Totalizer 1 to n

▶ Totalizer 1 to n	
Assign process variable	→ 🗎 109
Unit totalizer 1 to n	→ 🗎 109
Totalizer operation mode	→ 🗎 109
Failure mode	→ 🗎 109

Parameter overview with brief description

Parameter	Prerequisite	Description	Selection	Factory setting
Assign process variable	–	Select process variable for totalizer.	▪ Off ▪ Mass flow ▪ Volume flow ▪ Corrected volume flow * ▪ Target mass flow * ▪ Carrier mass flow * ▪ Target volume flow * ▪ Carrier volume flow * ▪ Target corrected volume flow * ▪ Carrier corrected volume flow *	Mass flow
Unit totalizer 1 to n	A process variable is selected in the **Assign process variable** parameter (→ 🗎 109) of the **Totalizer 1 to n** submenu.	Select process variable totalizer unit.	Unit choose list	Country-specific: ▪ kg ▪ lb
Totalizer operation mode	A process variable is selected in the **Assign process variable** parameter (→ 🗎 109) of the **Totalizer 1 to n** submenu.	Select totalizer calculation mode.	▪ Net flow total ▪ Forward flow total ▪ Reverse flow total	Net flow total
Failure mode	A process variable is selected in the **Assign process variable** parameter (→ 🗎 109) of the **Totalizer 1 to n** submenu.	Define totalizer behavior in alarm condition.	▪ Stop ▪ Actual value ▪ Last valid value	Stop

* Visibility depends on order options or device settings

10.5.5 Carrying out additional display configurations

In the **Display** submenu you can set all the parameters associated with the configuration of the local display.

Navigation
"Setup" menu → Advanced setup → Display

▶ Display	
Format display	→ 111
Value 1 display	→ 111
0% bargraph value 1	→ 111
100% bargraph value 1	→ 112
Decimal places 1	→ 112
Value 2 display	→ 112
Decimal places 2	→ 112
Value 3 display	→ 112
0% bargraph value 3	→ 112
100% bargraph value 3	→ 112
Decimal places 3	→ 112
Value 4 display	→ 112
Decimal places 4	→ 112
Display language	→ 112
Display interval	→ 113
Display damping	→ 113
Header	→ 113
Header text	→ 113
Separator	→ 113
Backlight	→ 113

Parameter overview with brief description

Parameter	Prerequisite	Description	Selection / User entry	Factory setting
Format display	A local display is provided.	Select how measured values are shown on the display.	▪ 1 value, max. size ▪ 1 bargraph + 1 value ▪ 2 values ▪ 1 value large + 2 values ▪ 4 values	1 value, max. size
Value 1 display	A local display is provided.	Select the measured value that is shown on the local display.	▪ Mass flow ▪ Volume flow ▪ Corrected volume flow * ▪ Target mass flow * ▪ Carrier mass flow * ▪ Target volume flow * ▪ Carrier volume flow * ▪ Target corrected volume flow * ▪ Carrier corrected volume flow * ▪ Density ▪ Reference density * ▪ Concentration * ▪ Temperature ▪ Carrier pipe temperature * ▪ Electronic temperature ▪ Oscillation frequency 0 ▪ Oscillation amplitude 0 * ▪ Frequency fluctuation 0 * ▪ Oscillation damping 0 * ▪ Oscillation damping fluctuation 0 * ▪ Signal asymmetry * ▪ Exciter current 0 * ▪ Totalizer 1 ▪ Totalizer 2 ▪ Totalizer 3 ▪ Current output 1 * ▪ Current output 2 * ▪ Current output 3 * ▪ Pressure ▪ Application specific output 1 * ▪ Index inhomogeneous medium ▪ Application specific output 0 * ▪ Index suspended bubbles *	Mass flow
0% bargraph value 1	A local display is provided.	Enter 0% value for bar graph display.	Signed floating-point number	Country-specific: ▪ 0 kg/h ▪ 0 lb/min

Parameter	Prerequisite	Description	Selection / User entry	Factory setting
100% bargraph value 1	A local display is provided.	Enter 100% value for bar graph display.	Signed floating-point number	Depends on country and nominal diameter
Decimal places 1	A measured value is specified in the **Value 1 display** parameter.	Select the number of decimal places for the display value.	▪ x ▪ x.x ▪ x.xx ▪ x.xxx ▪ x.xxxx	x.xx
Value 2 display	A local display is provided.	Select the measured value that is shown on the local display.	For the picklist, see the **Value 2 display** parameter (→ 🗎 102)	None
Decimal places 2	A measured value is specified in the **Value 2 display** parameter.	Select the number of decimal places for the display value.	▪ x ▪ x.x ▪ x.xx ▪ x.xxx ▪ x.xxxx	x.xx
Value 3 display	A local display is provided.	Select the measured value that is shown on the local display.	For the picklist, see the **Value 2 display** parameter (→ 🗎 102)	None
0% bargraph value 3	A selection was made in the **Value 3 display** parameter.	Enter 0% value for bar graph display.	Signed floating-point number	Country-specific: ▪ 0 kg/h ▪ 0 lb/min
100% bargraph value 3	A selection was made in the **Value 3 display** parameter.	Enter 100% value for bar graph display.	Signed floating-point number	0
Decimal places 3	A measured value is specified in the **Value 3 display** parameter.	Select the number of decimal places for the display value.	▪ x ▪ x.x ▪ x.xx ▪ x.xxx ▪ x.xxxx	x.xx
Value 4 display	A local display is provided.	Select the measured value that is shown on the local display.	For the picklist, see the **Value 2 display** parameter (→ 🗎 102)	None
Decimal places 4	A measured value is specified in the **Value 4 display** parameter.	Select the number of decimal places for the display value.	▪ x ▪ x.x ▪ x.xx ▪ x.xxx ▪ x.xxxx	x.xx
Display language	A local display is provided.	Set display language.	▪ English ▪ Deutsch ▪ Français ▪ Español ▪ Italiano ▪ Nederlands ▪ Portuguesa ▪ Polski ▪ русский язык (Russian) ▪ Svenska ▪ Türkçe ▪ 中文 (Chinese) ▪ 日本語 (Japanese) ▪ 한국어 (Korean) ▪ العَرَبِيّة (Arabic) * ▪ Bahasa Indonesia ▪ ภาษาไทย (Thai) * ▪ tiếng Việt (Vietnamese) ▪ čeština (Czech)	English (alternatively, the ordered language is preset in the device)

Parameter	Prerequisite	Description	Selection / User entry	Factory setting
Display interval	A local display is provided.	Set time measured values are shown on display if display alternates between values.	1 to 10 s	5 s
Display damping	A local display is provided.	Set display reaction time to fluctuations in the measured value.	0.0 to 999.9 s	0.0 s
Header	A local display is provided.	Select header contents on local display.	▪ Device tag ▪ Free text	Device tag
Header text	In the **Header** parameter, the **Free text** option is selected.	Enter display header text.	Max. 12 characters such as letters, numbers or special characters (e.g. @, %, /)	----------
Separator	A local display is provided.	Select decimal separator for displaying numerical values.	▪ . (point) ▪ , (comma)	. (point)
Backlight	One of the following conditions is met: ▪ Order code for "Display; operation", option **F** "4-line, illum.; touch control" ▪ Order code for "Display; operation", option **G** "4-line, illum.; touch control +WLAN" ▪ Order code for "Display; operation", option **O** "Separate 4-line display, illum.; 10m/30ft cable; touch control"	Switch the local display backlight on and off.	▪ Disable ▪ Enable	Enable

* Visibility depends on order options or device settings

10.5.6 WLAN configuration

The **WLAN Settings** submenu guides the user systematically through all the parameters that have to be set for the WLAN configuration.

Navigation
"Setup" menu → Advanced setup → WLAN Settings

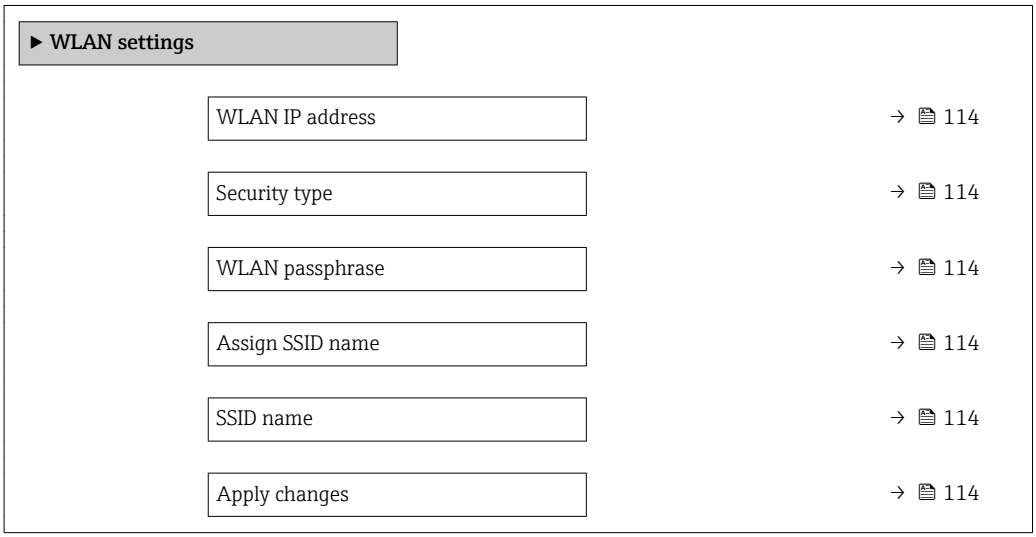

Parameter overview with brief description

Parameter	Prerequisite	Description	User entry / Selection	Factory setting
WLAN IP address	–	Enter IP address of the WLAN interface of the device.	4 octet: 0 to 255 (in the particular octet)	192.168.1.212
Network security	–	Select the security type of the WLAN network.	▪ Unsecured ▪ WPA2-PSK ▪ EAP-PEAP with MSCHAPv2 * ▪ EAP-PEAP MSCHAPv2 no server authentic. * ▪ EAP-TLS *	WPA2-PSK
WLAN passphrase	The **WPA2-PSK** option is selected in the **Security type** parameter.	Enter the network key (8 to 32 characters). The network key supplied with the device should be changed during commissioning for security reasons.	8 to 32-digit character string comprising numbers, letters and special characters (without spaces)	Serial number of the measuring device (e.g. L100A802000)
Assign SSID name	–	Select which name will be used for SSID: device tag or user-defined name.	▪ Device tag ▪ User-defined	User-defined
SSID name	▪ The **User-defined** option is selected in the **Assign SSID name** parameter. ▪ The **WLAN access point** option is selected in the **WLAN mode** parameter.	Enter the user-defined SSID name (max. 32 characters). The user-defined SSID name may only be assigned once. If the SSID name is assigned more than once, the devices can interfere with one another.	Max. 32-digit character string comprising numbers, letters and special characters	EH_device designation_last 7 digits of the serial number (e.g. EH_Promass_300_A802000)
Apply changes	–	Use changed WLAN settings.	▪ Cancel ▪ Ok	Cancel

* Visibility depends on order options or device settings

10.5.7 Configuration management

After commissioning, you can save the current device configurationor restore the previous device configuration.

You can do so using the **Configuration management** parameter and the related options found in the **Configuration backup** submenu.

Navigation

"Setup" menu → Advanced setup → Configuration backup

▶ Configuration backup	
Operating time	→ 📄 115
Last backup	→ 📄 115
Configuration management	→ 📄 115

Backup state	→ 115
Comparison result	→ 115

Parameter overview with brief description

Parameter	Description	User interface / Selection	Factory setting
Operating time	Indicates how long the device has been in operation.	Days (d), hours (h), minutes (m) and seconds (s)	–
Last backup	Shows when the last data backup was saved to HistoROM backup.	Days (d), hours (h), minutes (m) and seconds (s)	–
Configuration management	Select action for managing the device data in the HistoROM backup.	▪ Cancel ▪ Execute backup ▪ Restore * ▪ Compare * ▪ Clear backup data	Cancel
Backup state	Shows the current status of data saving or restoring.	▪ None ▪ Backup in progress ▪ Restoring in progress ▪ Delete in progress ▪ Compare in progress ▪ Restoring failed ▪ Backup failed	None
Comparison result	Comparison of current device data with HistoROM backup.	▪ Settings identical ▪ Settings not identical ▪ No backup available ▪ Backup settings corrupt ▪ Check not done ▪ Dataset incompatible	Check not done

* Visibility depends on order options or device settings

Function scope of the "Configuration management" parameter

Options	Description
Cancel	No action is executed and the user exits the parameter.
Execute backup	A backup copy of the current device configuration is saved from the HistoROM backup to the memory of the device. The backup copy includes the transmitter data of the device.
Restore	The last backup copy of the device configuration is restored from the device memory to the device's HistoROM backup. The backup copy includes the transmitter data of the device.
Compare	The device configuration saved in the device memory is compared with the current device configuration of the HistoROM backup.
Clear backup data	The backup copy of the device configuration is deleted from the memory of the device.

HistoROM backup
A HistoROM is a "non-volatile" device memory in the form of an EEPROM.

While this action is in progress, the configuration cannot be edited via the local display and a message on the processing status appears on the display.

10.5.8 Using parameters for device administration

The **Administration** submenu systematically guides the user through all the parameters that can be used for device administration purposes.

Navigation
"Setup" menu → Advanced setup → Administration

▶ **Administration**		
	▶ **Define access code**	→ 📄 116
	▶ **Reset access code**	→ 📄 116
	Device reset	→ 📄 117

Using the parameter to define the access code

Navigation
"Setup" menu → Advanced setup → Administration → Define access code

▶ **Define access code**		
	Define access code	→ 📄 116
	Confirm access code	→ 📄 116

Parameter overview with brief description

Parameter	Description	User entry
Define access code	Restrict write-access to parameters to protect the configuration of the device against unintentional changes.	Max. 16-digit character string comprising numbers, letters and special characters
Confirm access code	Confirm the entered access code.	Max. 16-digit character string comprising numbers, letters and special characters

Using the parameter to reset the access code

Navigation
"Setup" menu → Advanced setup → Administration → Reset access code

▶ **Reset access code**		
	Operating time	→ 📄 117
	Reset access code	→ 📄 117

Parameter overview with brief description

Parameter	Description	User interface / User entry	Factory setting
Operating time	Indicates how long the device has been in operation.	Days (d), hours (h), minutes (m) and seconds (s)	–
Reset access code	Reset access code to factory settings. For a reset code, contact your Endress+Hauser service organization. The reset code can only be entered via: ▪ Web browser ▪ DeviceCare, FieldCare (via service interface CDI-RJ45) ▪ Fieldbus	Character string comprising numbers, letters and special characters	0x00

Using the parameter to reset the device

Navigation
"Setup" menu → Advanced setup → Administration

Parameter overview with brief description

Parameter	Description	Selection	Factory setting
Device reset	Reset the device configuration - either entirely or in part - to a defined state.	▪ Cancel ▪ To delivery settings ▪ Restart device ▪ Restore S-DAT backup *	Cancel

* Visibility depends on order options or device settings

10.6 Simulation

The **Simulation** submenu enables you to simulate, without a real flow situation, various process variables in the process and the device alarm mode and to verify downstream signal chains (switching valves or closed-control loops).

Navigation
"Diagnostics" menu → Simulation

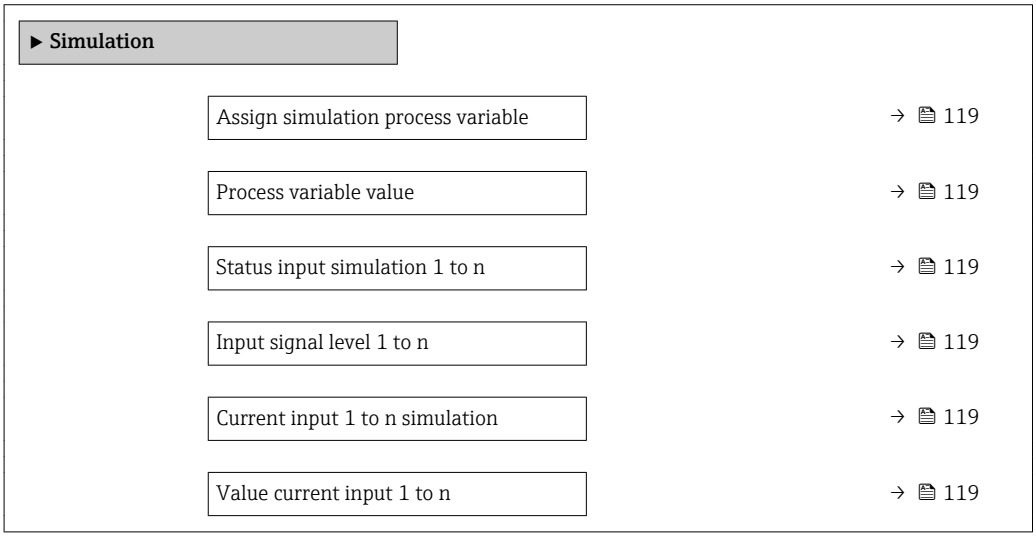

Current output 1 to n simulation	→ 119
Value current output 1 to n	→ 119
Frequency output simulation 1 to n	→ 119
Frequency value 1 to n	→ 119
Pulse output simulation 1 to n	→ 119
Pulse value 1 to n	→ 119
Switch output simulation 1 to n	→ 120
Switch status 1 to n	→ 120
Relay output 1 to n simulation	→ 120
Switch status 1 to n	→ 120
Pulse output simulation	→ 120
Pulse value	→ 120
Device alarm simulation	→ 120
Diagnostic event category	→ 120
Diagnostic event simulation	→ 120

Parameter overview with brief description

Parameter	Prerequisite	Description	Selection / User entry / User interface	Factory setting
Assign simulation process variable	–	Select a process variable for the simulation process that is activated.	▪ Off ▪ Mass flow ▪ Volume flow ▪ Corrected volume flow * ▪ Target mass flow * ▪ Carrier mass flow * ▪ Target volume flow * ▪ Carrier volume flow * ▪ Target corrected volume flow * ▪ Carrier corrected volume flow * ▪ Density ▪ Reference density * ▪ Temperature ▪ Concentration *	Off
Process variable value	A process variable is selected in the **Assign simulation process variable** parameter (→ 🗎 119).	Enter the simulation value for the selected process variable.	Depends on the process variable selected	0
Status input simulation 1 to n	–	Switch simulation of the status input on and off.	▪ Off ▪ On	Off
Input signal level 1 to n	In the **Status input simulation** parameter, the **On** option is selected.	Select the signal level for the simulation of the status input.	▪ High ▪ Low	High
Current input 1 to n simulation	–	Switch simulation of the current input on and off.	▪ Off ▪ On	Off
Value current input 1 to n	In the **Current input 1 to n simulation** parameter, the **On** option is selected.	Enter the current value for simulation.	0 to 22.5 mA	0 mA
Current output 1 to n simulation	–	Switch the simulation of the current output on and off.	▪ Off ▪ On	Off
Value current output 1 to n	In the **Current output 1 to n simulation** parameter, the **On** option is selected.	Enter the current value for simulation.	3.59 to 22.5 mA	3.59 mA
Frequency output simulation 1 to n	In the **Operating mode** parameter, the **Frequency** option is selected.	Switch the simulation of the frequency output on and off.	▪ Off ▪ On	Off
Frequency value 1 to n	In the **Frequency output simulation 1 to n** parameter, the **On** option is selected.	Enter the frequency value for the simulation.	0.0 to 12 500.0 Hz	0.0 Hz
Pulse output simulation 1 to n	In the **Operating mode** parameter, the **Pulse** option is selected.	Set and switch off the pulse output simulation. ℹ For **Fixed value** option: **Pulse width** parameter (→ 🗎 90) defines the pulse width of the pulses output.	▪ Off ▪ Fixed value ▪ Down-counting value	Off
Pulse value 1 to n	In the **Pulse output simulation 1 to n** parameter, the **Down-counting value** option is selected.	Enter the number of pulses for simulation.	0 to 65 535	0

Parameter	Prerequisite	Description	Selection / User entry / User interface	Factory setting
Switch output simulation 1 to n	In the **Operating mode** parameter, the **Switch** option is selected.	Switch the simulation of the switch output on and off.	▪ Off ▪ On	Off
Switch status 1 to n	–	Select the status of the status output for the simulation.	▪ Open ▪ Closed	Open
Relay output 1 to n simulation	–	Switch simulation of the relay output on and off.	▪ Off ▪ On	Off
Switch status 1 to n	The **On** option is selected in the **Switch output simulation 1 to n** parameter parameter.	Select status of the relay output for the simulation.	▪ Open ▪ Closed	Open
Pulse output simulation	–	Set and switch off the pulse output simulation. For **Fixed value** option: **Pulse width** parameter defines the pulse width of the pulses output.	▪ Off ▪ Fixed value ▪ Down-counting value	Off
Pulse value	In the **Pulse output simulation** parameter, the **Down-counting value** option is selected.	Set and switch off the pulse output simulation.	0 to 65 535	0
Device alarm simulation	–	Switch the device alarm on and off.	▪ Off ▪ On	Off
Diagnostic event category	–	Select a diagnostic event category.	▪ Sensor ▪ Electronics ▪ Configuration ▪ Process	Process
Diagnostic event simulation	–	Select a diagnostic event to simulate this event.	▪ Off ▪ Diagnostic event picklist (depends on the category selected)	Off
Logging interval	–	Define the logging interval tlog for data logging. This value defines the time interval between the individual data points in the memory.	1.0 to 3 600.0 s	–

* Visibility depends on order options or device settings

10.7 Protecting settings from unauthorized access

The following write protection options exist in order to protect the configuration of the measuring device from unintentional modification:
- Protect access to parameters via access code → 🗎 120
- Protect access to local operation via key locking → 🗎 56
- Protect access to measuring device via write protection switch → 🗎 122

10.7.1 Write protection via access code

The effects of the user-specific access code are as follows:
- Via local operation, the parameters for the measuring device configuration are write-protected and their values can no longer be changed.
- Device access is protected via the Web browser, as are the parameters for the measuring device configuration.
- Device access is protected via FieldCare or DeviceCare (via CDI-RJ45 service interface), as are the parameters for the measuring device configuration.

Defining the access code via local display

1. Navigate to the **Define access code** parameter (→ 🗎 116).
2. Define a max. 16-digit character string comprising numbers, letters and special characters as the access code.
3. Enter the access code again in the **Confirm access code** parameter (→ 🗎 116) to confirm the code.
   ↳ The 🔒-symbol appears in front of all write-protected parameters.

The device automatically locks the write-protected parameters again if a key is not pressed for 10 minutes in the navigation and editing view. The device locks the write-protected parameters automatically after 60 s if the user skips back to the operational display mode from the navigation and editing view.

- If parameter write protection is activated via an access code, it can also only be deactivated via this access code → 🗎 55.
- The user role with which the user is currently logged on via the local display → 🗎 55 is indicated by the **Access status** parameter. Navigation path: Operation → Access status

Parameters which can always be modified via the local display

Certain parameters that do not affect the measurement are excepted from parameter write protection via the local display. Despite the user-specific access code, they can always be modified, even if the other parameters are locked.

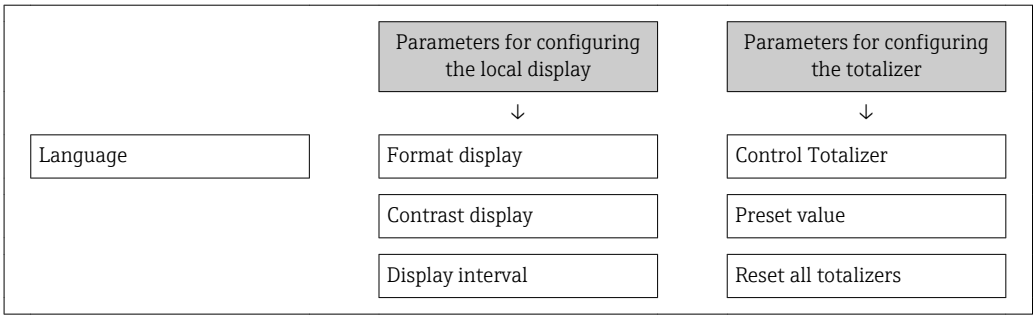

Defining the access code via the Web browser

1. Navigate to the **Define access code** parameter (→ 🗎 116).
2. Define a max. 16-digit numeric code as an access code.
3. Enter the access code again in the **Confirm access code** parameter (→ 🗎 116) to confirm the code.
   ↳ The Web browser switches to the login page.

If no action is performed for 10 minutes, the Web browser automatically returns to the login page.

- If parameter write protection is activated via an access code, it can also only be deactivated via this access code → 🗎 55.
- The user role with which the user is currently logged on via Web browser is indicated by the **Access status** parameter. Navigation path: Operation → Access status

Resetting the access code

If you misplace the user-specific access code, it is possible to reset the code to the factory setting. A reset code must be entered for this purpose. The user-specific access code can then be defined again afterwards.

Via Web browser, FieldCare, DeviceCare (via CDI-RJ45 service interface), fieldbus

For a reset code, contact your Endress+Hauser service organization.

1. Navigate to the **Reset access code** parameter (→ 117).
2. Enter the reset code.
   ↳ The access code has been reset to the factory setting **0000**. It can be redefined → 121.

10.7.2 Write protection via write protection switch

Unlike parameter write protection via a user-specific access code, this allows write access to the entire operating menu - except for the **"Contrast display" parameter** - to be locked.

The parameter values are now read only and cannot be edited any more (exception **"Contrast display" parameter**):
- Via local display
- Via HART protocol

1.

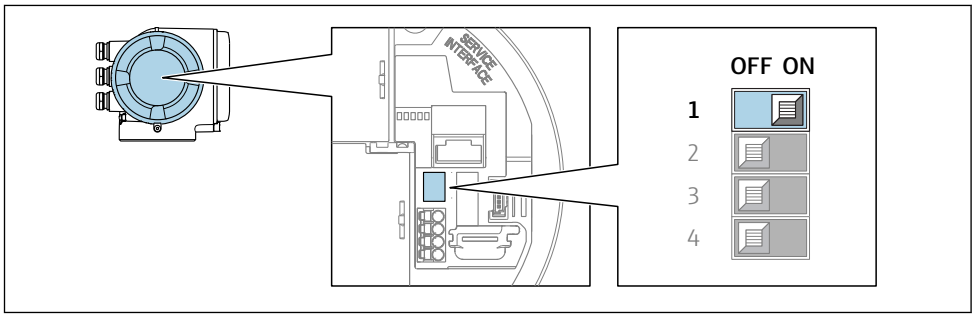

A0029630

Setting the write protection (WP) switch on the main electronics module to the **ON** position enables hardware write protection.
↳ In the **Locking status** parameter the **Hardware locked** option is displayed → 123. In addition, on the local display the 🔒-symbol appears in front of the parameters in the header of the operational display and in the navigation view.

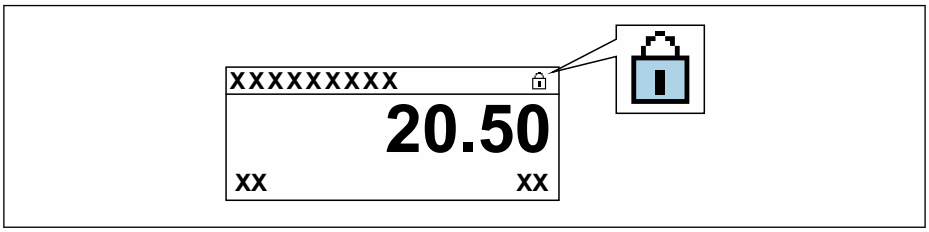

A0029425

2. Setting the write protection (WP) switch on the main electronics module to the **OFF** position (factory setting) disables hardware write protection.
   ↳ No option is displayed in the **Locking status** parameter → 123. On the local display, the 🔒-symbol disappears from in front of the parameters in the header of the operational display and in the navigation view.

11 Operation

11.1 Reading the device locking status

Device active write protection: **Locking status** parameter

Operation → Locking status

Function scope of the "Locking status" parameter

Options	Description
None	The access status displayed in the **Access status** parameter applies → 🗎 55. Only appears on local display.
Hardware locked	The DIP switch for hardware locking is activated on the PCB board. This locks write access to the parameters (e.g. via local display or operating tool) → 🗎 122.
SIL locked	The SIL mode is enabled. This locks write access to the parameters (e.g. via local display or operating tool).
Temporarily locked	Write access to the parameters is temporarily locked on account of internal processes running in the device (e.g. data upload/download, reset etc.). Once the internal processing has been completed, the parameters can be changed once again.

11.2 Adjusting the operating language

Detailed information:
- To configure the operating language → 🗎 76
- For information on the operating languages supported by the measuring device → 🗎 185

11.3 Configuring the display

Detailed information:
- On the basic settings for the local display → 🗎 99
- On the advanced settings for the local display → 🗎 110

11.4 Reading measured values

With the **Measured values** submenu, it is possible to read all the measured values.

Navigation
"Diagnostics" menu → Measured values

▶ **Measured values**	
▶ **Measured variables**	→ 🗎 124
▶ **Input values**	→ 🗎 126
▶ **Output values**	→ 🗎 127
▶ **Totalizer**	→ 🗎 125

11.4.1 "Measured variables" submenu

The **Measured variables** submenu contains all the parameters needed to display the current measured values for each process variable.

Navigation
"Diagnostics" menu → Measured values → Measured variables

▶ Measured variables	
Mass flow	→ 124
Volume flow	→ 124
Corrected volume flow	→ 124
Density	→ 124
Reference density	→ 125
Temperature	→ 125
Pressure value	→ 125
Concentration	→ 125
Target mass flow	→ 125
Carrier mass flow	→ 125

Parameter overview with brief description

Parameter	Prerequisite	Description	User interface
Mass flow	–	Displays the mass flow that is currently measured. *Dependency* The unit is taken from the **Mass flow unit** parameter (→ 79).	Signed floating-point number
Volume flow	–	Displays the volume flow currently calculated. *Dependency* The unit is taken from the **Volume flow unit** parameter (→ 79).	Signed floating-point number
Corrected volume flow	–	Displays the corrected volume flow that is currently calculated. *Dependency* The unit is taken from the **Corrected volume flow unit** parameter (→ 79).	Signed floating-point number
Density	–	Shows the density currently measured. *Dependency* The unit is taken from the **Density unit** parameter (→ 79).	Signed floating-point number

Parameter	Prerequisite	Description	User interface
Reference density	–	Displays the reference density that is currently calculated. *Dependency* The unit is taken from the **Reference density unit** parameter (→ 🗎 79).	Signed floating-point number
Temperature	–	Shows the medium temperature currently measured. *Dependency* The unit is taken from the **Temperature unit** parameter (→ 🗎 80).	Signed floating-point number
Pressure value	–	Displays either a fixed or external pressure value. *Dependency* The unit is taken from the **Pressure unit** parameter (→ 🗎 80).	Signed floating-point number
Concentration	For the following order code: Order code for "Application package", option **ED** "Concentration" ℹ The software options currently enabled are displayed in the **Software option overview** parameter.	Displays the concentration that is currently calculated. *Dependency* The unit is taken from the **Concentration unit** parameter.	Signed floating-point number
Target mass flow	With the following conditions: Order code for "Application package", option **ED** "Concentration" ℹ The software options currently enabled are displayed in the **Software option overview** parameter.	Displays the mass flow that is currently measured for the target medium. *Dependency* The unit is taken from the **Mass flow unit** parameter (→ 🗎 79).	Signed floating-point number
Carrier mass flow	With the following conditions: Order code for "Application package", option **ED** "Concentration" ℹ The software options currently enabled are displayed in the **Software option overview** parameter.	Displays the mass flow that is currently measured for the carrier medium. *Dependency* The unit is taken from the **Mass flow unit** parameter (→ 🗎 79).	Signed floating-point number

11.4.2 "Totalizer" submenu

The **Totalizer** submenu contains all the parameters needed to display the current measured values for every totalizer.

Navigation

"Diagnostics" menu → Measured values → Totalizer

▶ Totalizer	
Totalizer value 1 to n	→ 🗎 126
Totalizer overflow 1 to n	→ 🗎 126

Parameter overview with brief description

Parameter	Prerequisite	Description	User interface
Totalizer value 1 to n	A process variable is selected in the **Assign process variable** parameter (→ 🗎 109) of the **Totalizer 1 to n** submenu.	Displays the current totalizer counter value.	Signed floating-point number
Totalizer overflow 1 to n	A process variable is selected in the **Assign process variable** parameter (→ 🗎 109) of the **Totalizer 1 to n** submenu.	Displays the current totalizer overflow.	Integer with sign

11.4.3 "Input values" submenu

The **Input values** submenu guides you systematically to the individual input values.

Navigation

"Diagnostics" menu → Measured values → Input values

▶ **Input values**	
▶ **Current input 1 to n**	→ 🗎 126
▶ **Status input 1 to n**	→ 🗎 126

Input values of current input

The **Current input 1 to n** submenu contains all the parameters needed to display the current measured values for every current input.

Navigation

"Diagnostics" menu → Measured values → Input values → Current input 1 to n

▶ **Current input 1 to n**	
Measured values 1 to n	→ 🗎 126
Measured current 1 to n	→ 🗎 126

Parameter overview with brief description

Parameter	Description	User interface
Measured values 1 to n	Displays the current input value.	Signed floating-point number
Measured current 1 to n	Displays the current value of the current input.	0 to 22.5 mA

Input values of status input

The **Status input 1 to n** submenu contains all the parameters needed to display the current measured values for every status input.

Navigation
"Diagnostics" menu → Measured values → Input values → Status input 1 to n

▶ **Status input 1 to n**		
	Value status input	→ 📄 127

Parameter overview with brief description

Parameter	Description	User interface
Value status input	Shows the current input signal level.	▪ High ▪ Low

11.4.4 Output values

The **Output values** submenu contains all the parameters needed to display the current measured values for every output.

Navigation
"Diagnostics" menu → Measured values → Output values

▶ **Output values**		
	▶ **Current output 1 to n**	→ 📄 127
	▶ **Pulse/frequency/switch output 1 to n**	→ 📄 128
	▶ **Relay output 1 to n**	→ 📄 128
	▶ **Double pulse output**	→ 📄 129

Output values of current output

The **Value current output** submenu contains all the parameters needed to display the current measured values for every current output.

Navigation
"Diagnostics" menu → Measured values → Output values → Value current output 1 to n

▶ **Current output 1 to n**		
	Output current 1 to n	→ 📄 128
	Measured current 1 to n	→ 📄 128

Parameter overview with brief description

Parameter	Description	User interface
Output current 1	Displays the current value currently calculated for the current output.	3.59 to 22.5 mA
Measured current	Displays the current value currently measured for the current output.	0 to 30 mA

Output values for pulse/frequency/switch output

The **Pulse/frequency/switch output 1 to n** submenu contains all the parameters needed to display the current measured values for every pulse/frequency/switch output.

Navigation

"Diagnostics" menu → Measured values → Output values → Pulse/frequency/switch output 1 to n

▶ **Pulse/frequency/switch output 1 to n**

Output frequency 1 to n	→ 📄 128
Pulse output 1 to n	→ 📄 128
Switch status 1 to n	→ 📄 128

Parameter overview with brief description

Parameter	Prerequisite	Description	User interface
Output frequency 1 to n	In the **Operating mode** parameter, the **Frequency** option is selected.	Displays the value currently measured for the frequency output.	0.0 to 12 500.0 Hz
Pulse output 1 to n	The **Pulse** option is selected in the **Operating mode** parameter parameter.	Displays the pulse frequency currently output.	Positive floating-point number
Switch status 1 to n	The **Switch** option is selected in the **Operating mode** parameter.	Displays the current switch output status.	▪ Open ▪ Closed

Output values for relay output

The **Relay output 1 to n** submenu contains all the parameters needed to display the current measured values for every relay output.

Navigation

"Diagnostics" menu → Measured values → Output values → Relay output 1 to n

▶ **Relay output 1 to n**

Switch status	→ 📄 129
Switch cycles	→ 📄 129
Max. switch cycles number	→ 📄 129

Parameter overview with brief description

Parameter	Description	User interface
Switch status	Shows the current relay switch status.	▪ Open ▪ Closed
Switch cycles	Shows number of all performed switch cycles.	Positive integer
Max. switch cycles number	Shows the maximal number of guaranteed switch cycles.	Positive integer

Output values for double pulse output

The **Double pulse output** submenu contains all the parameters needed to display the current measured values for every double pulse output.

Navigation
"Diagnostics" menu → Measured values → Output values → Double pulse output

▶ **Double pulse output**	
Pulse output	→ 📄 129

Parameter overview with brief description

Parameter	Description	User interface
Pulse output	Shows the currently output pulse frequency.	Positive floating-point number

11.5 Adapting the measuring device to the process conditions

The following are available for this purpose:
- Basic settings using the**Setup** menu (→ 📄 76)
- Advanced settings using the**Advanced setup** submenu (→ 📄 105)

11.6 Performing a totalizer reset

The totalizers are reset in the **Operation** submenu:
- Control Totalizer
- Reset all totalizers

Navigation
"Operation" menu → Totalizer handling

▶ **Totalizer handling**	
Control Totalizer 1 to n	→ 📄 130
Preset value 1 to n	→ 📄 130
Reset all totalizers	→ 📄 130

Parameter overview with brief description

Parameter	Prerequisite	Description	Selection / User entry	Factory setting
Control Totalizer 1 to n	A process variable is selected in the **Assign process variable** parameter (→ 🗎 109) of the **Totalizer 1 to n** submenu.	Control totalizer value.	▪ Totalize ▪ Reset + hold * ▪ Preset + hold * ▪ Reset + totalize ▪ Preset + totalize * ▪ Hold *	Totalize
Preset value 1 to n	A process variable is selected in the **Assign process variable** parameter (→ 🗎 109) of the **Totalizer 1 to n** submenu.	Specify start value for totalizer. *Dependency* ℹ The unit of the selected process variable is specified for the totalizer in the **Unit totalizer** parameter (→ 🗎 109).	Signed floating-point number	Country-specific: ▪ 0 kg ▪ 0 lb
Reset all totalizers	–	Reset all totalizers to 0 and start.	▪ Cancel ▪ Reset + totalize	Cancel

* Visibility depends on order options or device settings

11.6.1 Function scope of the "Control Totalizer" parameter

Options	Description
Totalize	The totalizer is started or continues running.
Reset + hold	The totaling process is stopped and the totalizer is reset to 0.
Preset + hold	The totaling process is stopped and the totalizer is set to its defined start value from the **Preset value** parameter.
Reset + totalize	The totalizer is reset to 0 and the totaling process is restarted.
Preset + totalize	The totalizer is set to the defined start value from the **Preset value** parameter and the totaling process is restarted.
Hold	Totalizing is stopped.

11.6.2 Function scope of the "Reset all totalizers" parameter

Options	Description
Cancel	No action is executed and the user exits the parameter.
Reset + totalize	Resets all totalizers to 0 and restarts the totaling process. This deletes all the flow values previously totalized.

11.7 Showing data logging

The **Extended HistoROM** application package must be enabled in the device (order option) for the **Data logging** submenu to appear. This contains all the parameters for the measured value history.

ℹ Data logging is also available via:
- Plant Asset Management Tool FieldCare → 🗎 66.
- Web browser

Function range

- A total of 1000 measured values can be stored
- 4 logging channels
- Adjustable logging interval for data logging
- Displays the measured value trend for each logging channel in the form of a chart

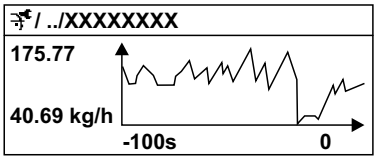

A0016357

30 Chart of a measured value trend

- x-axis: depending on the number of channels selected displays 250 to 1000 measured values of a process variable.
- y-axis: displays the approximate measured value span and constantly adapts this to the ongoing measurement.

If the length of the logging interval or the assignment of the process variables to the channels is changed, the content of the data logging is deleted.

Navigation

"Diagnostics" menu → Data logging

▶ **Data logging**	
Assign channel 1	→ 133
Assign channel 2	→ 133
Assign channel 3	→ 134
Assign channel 4	→ 134
Logging interval	→ 134
Clear logging data	→ 134
Data logging	→ 134
Logging delay	→ 134
Data logging control	→ 134
Data logging status	→ 134
Entire logging duration	→ 134
▶ **Display channel 1**	
▶ **Display channel 2**	

▶ Display channel 3

▶ Display channel 4

Parameter overview with brief description

Parameter	Prerequisite	Description	Selection / User entry / User interface	Factory setting
Assign channel 1	The **Extended HistoROM** application package is available.	Assign process variable to logging channel.	▪ Off ▪ Mass flow ▪ Volume flow ▪ Corrected volume flow * ▪ Target mass flow * ▪ Carrier mass flow * ▪ Target volume flow * ▪ Carrier volume flow * ▪ Target corrected volume flow * ▪ Carrier corrected volume flow * ▪ Density ▪ Reference density * ▪ Concentration * ▪ Temperature ▪ Carrier pipe temperature * ▪ Electronic temperature ▪ Oscillation frequency 0 ▪ Oscillation amplitude * ▪ Frequency fluctuation 0 * ▪ Oscillation damping 0 * ▪ Oscillation damping fluctuation 0 * ▪ Signal asymmetry * ▪ Exciter current 0 * ▪ HBSI * ▪ Current output 1 * ▪ Current output 2 * ▪ Current output 3 * ▪ Current output 4 * ▪ Pressure ▪ Application specific output 1 * ▪ Index inhomogeneous medium ▪ Application specific output 0 * ▪ Index suspended bubbles *	Off
Assign channel 2	The **Extended HistoROM** application package is available. The software options currently enabled are displayed in the **Software option overview** parameter.	Assign process variable to logging channel.	Picklist, see **Assign channel 1** parameter (→ 133)	Off

Parameter	Prerequisite	Description	Selection / User entry / User interface	Factory setting
Assign channel 3	The **Extended HistoROM** application package is available. The software options currently enabled are displayed in the **Software option overview** parameter.	Assign process variable to logging channel.	Picklist, see **Assign channel 1** parameter (→ 133)	Off
Assign channel 4	The **Extended HistoROM** application package is available. The software options currently enabled are displayed in the **Software option overview** parameter.	Assign process variable to logging channel.	Picklist, see **Assign channel 1** parameter (→ 133)	Off
Logging interval	The **Extended HistoROM** application package is available.	Define the logging interval for data logging. This value defines the time interval between the individual data points in the memory.	0.1 to 3 600.0 s	1.0 s
Clear logging data	The **Extended HistoROM** application package is available.	Clear the entire logging data.	▪ Cancel ▪ Clear data	Cancel
Data logging	–	Select the data logging method.	▪ Overwriting ▪ Not overwriting	Overwriting
Logging delay	In the **Data logging** parameter, the **Not overwriting** option is selected.	Enter the time delay for measured value logging.	0 to 999 h	0 h
Data logging control	In the **Data logging** parameter, the **Not overwriting** option is selected.	Start and stop measured value logging.	▪ None ▪ Delete + start ▪ Stop	None
Data logging status	In the **Data logging** parameter, the **Not overwriting** option is selected.	Displays the measured value logging status.	▪ Done ▪ Delay active ▪ Active ▪ Stopped	Done
Entire logging duration	In the **Data logging** parameter, the **Not overwriting** option is selected.	Displays the total logging duration.	Positive floating-point number	0 s

* Visibility depends on order options or device settings

12 Diagnostics and troubleshooting

12.1 General troubleshooting

For local display

Error	Possible causes	Solution
Local display dark and no output signals	Supply voltage does not match the value indicated on the nameplate.	Apply the correct supply voltage → 📄 34.
Local display dark and no output signals	The polarity of the supply voltage is wrong.	Correct the polarity.
Local display dark and no output signals	No contact between connecting cables and terminals.	Check the connection of the cables and correct if necessary.
Local display dark and no output signals	Terminals are not plugged into the I/O electronics module correctly. Terminals are not plugged into the main electronics module correctly.	Check terminals.
Local display dark and no output signals	I/O electronics module is defective. Main electronics module is defective.	Order spare part → 📄 158.
Local display is dark, but signal output is within the valid range	Display is set too bright or too dark.	▪ Set the display brighter by simultaneously pressing ⊞ + Ⓔ. ▪ Set the display darker by simultaneously pressing ⊟ + Ⓔ.
Local display is dark, but signal output is within the valid range	The cable of the display module is not plugged in correctly.	Insert the plug correctly into the main electronics module and display module.
Local display is dark, but signal output is within the valid range	Display module is defective.	Order spare part → 📄 158.
Backlighting of local display is red	Diagnostic event with "Alarm" diagnostic behavior has occurred.	Take remedial measures → 📄 145
Text on local display appears in a foreign language and cannot be understood.	Incorrect operating language is configured.	1. Press ⊟ + ⊞ for 2 s ("home position"). 2. Press Ⓔ. 3. Set the desired language in the **Display language** parameter (→ 📄 112).
Message on local display: "Communication Error" "Check Electronics"	Communication between the display module and the electronics is interrupted.	▪ Check the cable and the connector between the main electronics module and display module. ▪ Order spare part → 📄 158.

For output signals

Error	Possible causes	Solution
Signal output outside the valid range	Main electronics module is defective.	Order spare part → 📄 158.
Signal output outside the valid current range (< 3.6 mA or > 22 mA)	Main electronics module is defective. I/O electronics module is defective.	Order spare part → 📄 158.

Error	Possible causes	Solution
Device shows correct value on local display, but signal output is incorrect, though in the valid range.	Configuration error	Check and correct the parameter configuration.
Device measures incorrectly.	Configuration error or device is operated outside the application.	1. Check and correct parameter configuration. 2. Observe limit values specified in the "Technical Data".

For access

Error	Possible causes	Solution
No write access to parameters	Hardware write protection enabled	Set the write protection switch on main electronics module to the **OFF** position → 🗎 122.
No write access to parameters	Current user role has limited access authorization	1. Check user role → 🗎 55. 2. Enter correct customer-specific access code → 🗎 55.
No connection via HART protocol	Communication resistor missing or incorrectly installed.	Install the communication resistor (250 Ω) correctly. Observe the maximum load → 🗎 167.
No connection via HART protocol	Commubox ▪ Connected incorrectly ▪ Configured incorrectly ▪ Drivers not installed correctly ▪ USB interface on computer configured incorrectly	Observe the documentation for the Commubox. FXA195 HART: Document "Technical Information" TI00404F
Not connecting to Web server	Web server disabled	Using the "FieldCare" or "DeviceCare" operating tool, check whether the Web server of the measuring device is enabled, and enable it if necessary→ 🗎 62.
	Incorrect setting for the Ethernet interface of the computer	1. Check the properties of the Internet protocol (TCP/IP) → 🗎 58→ 🗎 58. 2. Check the network settings with the IT manager.
Not connecting to Web server	Incorrect IP address	Check the IP address: 192.168.1.212 → 🗎 58→ 🗎 58
Not connecting to Web server	Incorrect WLAN access data	▪ Check WLAN network status. ▪ Log on to the device again using WLAN access data. ▪ Verify that WLAN is enabled on the measuring device and operating device → 🗎 58.
	WLAN communication disabled	–
Not connecting to Web server, FieldCare or DeviceCare	No WLAN network available	▪ Check if WLAN reception is present: LED on display module is lit blue ▪ Check if WLAN connection is enabled: LED on display module flashes blue ▪ Switch on instrument function.
Network connection not present or unstable	WLAN network is weak.	▪ Operating device is outside of reception range: Check network status on operating device. ▪ To improve network performance, use an external WLAN antenna.

Error	Possible causes	Solution
	Parallel WLAN and Ethernet communication	▪ Check network settings. ▪ Temporarily enable only the WLAN as an interface.
Web browser frozen and operation no longer possible	Data transfer active	Wait until data transfer or current action is finished.
	Connection lost	1. Check cable connection and power supply. 2. Refresh the Web browser and restart if necessary.
Content of Web browser incomplete or difficult to read	Not using optimum version of Web server.	1. Use the correct Web browser version → 🗎 57. 2. Clear the Web browser cache and restart the Web browser.
	Unsuitable view settings.	Change the font size/display ratio of the Web browser.
No or incomplete display of contents in the Web browser	▪ JavaScript not enabled ▪ JavaScript cannot be enabled	1. Enable JavaScript. 2. Enter http://XXX.XXX.X.XXX/basic.html as the IP address.
Operation with FieldCare or DeviceCare via CDI-RJ45 service interface (port 8000)	Firewall of computer or network is preventing communication	Depending on the settings of the firewall used on the computer or in the network, the firewall must be adapted or disabled to allow FieldCare/DeviceCare access.
Flashing of firmware with FieldCare or DeviceCare via CDI-RJ45 service interface (via port 8000 or TFTP ports)	Firewall of computer or network is preventing communication	Depending on the settings of the firewall used on the computer or in the network, the firewall must be adapted or disabled to allow FieldCare/DeviceCare access.

12.2 Diagnostic information via light emitting diodes

12.2.1 Transmitter

Different LEDs in the transmitter provide information on the device status.

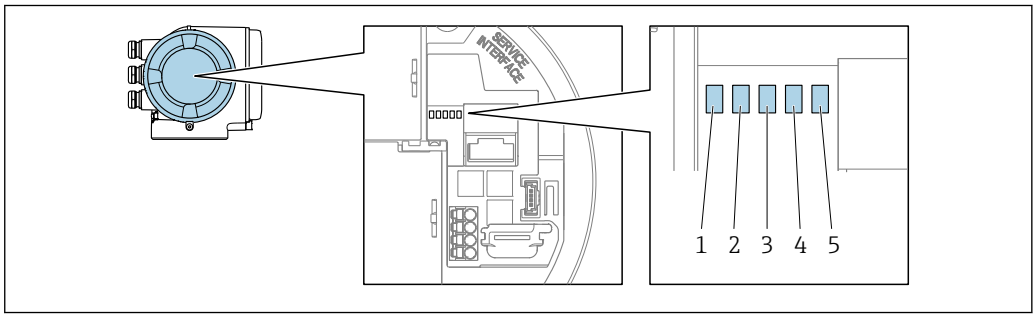

A0029629

1 *Supply voltage*
2 *Device status*
3 *Not used*
4 *Communication*
5 *Service interface (CDI) active*

LED	Color	Meaning
1 Supply voltage	Off	Supply voltage is off or too low.
	Green	Supply voltage is ok.

LED		Color	Meaning
2	Device status (normal operation)	Off	Firmware error
		Green	Device status is ok.
		Flashing green	Device is not configured.
		Red	A diagnostic event with "Alarm" diagnostic behavior has occurred.
		Flashing red	A diagnostic event with "Warning" diagnostic behavior has occurred.
		Flashing red/green	The device restarts.
2	Device status (during start-up)	Flashes red slowly	If > 30 seconds: problem with the boot loader.
		Flashes red quickly	If > 30 seconds: compatibility problem when reading the firmware.
3	Not used	–	–
4	Communication	Off	Communication not active.
		White	Communication active.
5	Service interface (CDI)	Off	Not connected or no connection established.
		Yellow	Connected and connection established.
		Flashing yellow	Service interface active.

12.3 Diagnostic information on local display

12.3.1 Diagnostic message

Faults detected by the self-monitoring system of the measuring device are displayed as a diagnostic message in alternation with the operational display.

Operational display in alarm condition	Diagnostic message

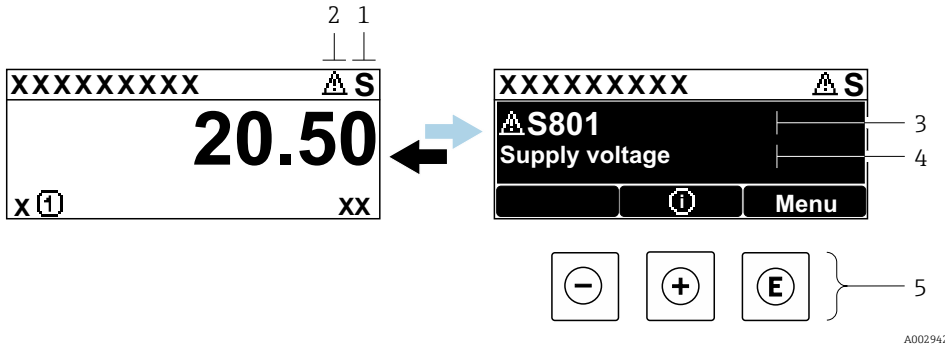

1 *Status signal*
2 *Diagnostic behavior*
3 *Diagnostic behavior with diagnostic code*
4 *Short text*
5 *Operating elements*

If two or more diagnostic events are pending simultaneously, only the message of the diagnostic event with the highest priority is shown.

Other diagnostic events that have occurred can be displayed in the **Diagnostics** menu:
- Via parameter → 📄 149
- Via submenus → 📄 150

Status signals

The status signals provide information on the state and reliability of the device by categorizing the cause of the diagnostic information (diagnostic event).

The status signals are categorized according to VDI/VDE 2650 and NAMUR Recommendation NE 107: F = Failure, C = Function Check, S = Out of Specification, M = Maintenance Required

Symbol	Meaning
F	**Failure** A device error has occurred. The measured value is no longer valid.
C	**Function check** The device is in service mode (e.g. during a simulation).
S	**Out of specification** The device is operated: ▪ Outside its technical specification limits (e.g. outside the process temperature range) ▪ Outside of the configuration carried out by the user (e.g. maximum flow in parameter **20 mA value**)
M	**Maintenance required** Maintenance is required. The measured value remains valid.

Diagnostic behavior

Symbol	Meaning
⊗	**Alarm** ▪ Measurement is interrupted. ▪ Signal outputs and totalizers assume the defined alarm condition. ▪ A diagnostic message is generated.
⚠	**Warning** Measurement is resumed. The signal outputs and totalizers are not affected. A diagnostic message is generated.

Diagnostic information

The fault can be identified using the diagnostic information. The short text helps you by providing information about the fault. In addition, the corresponding symbol for the diagnostic behavior is displayed in front of the diagnostic information on the local display.

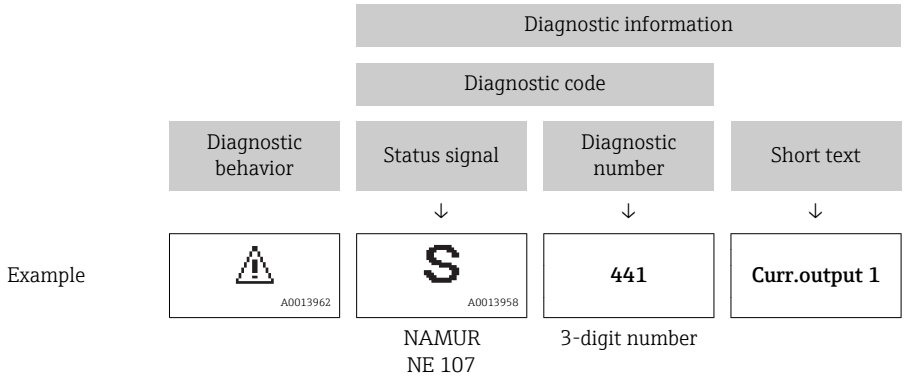

Operating elements

Key	Meaning
⊕	**Plus key** *In a menu, submenu* Opens the message about remedy information.
Ⓔ	**Enter key** *In a menu, submenu* Opens the operating menu.

12.3.2 Calling up remedial measures

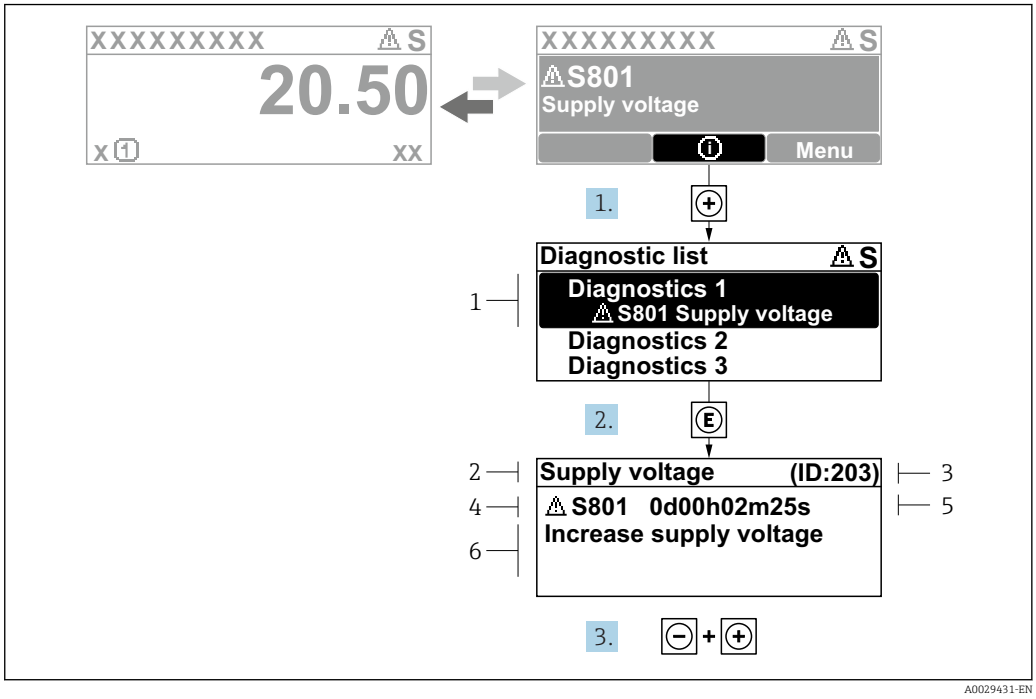

31 *Message about remedial measures*

1 *Diagnostic information*
2 *Short text*
3 *Service ID*
4 *Diagnostic behavior with diagnostic code*
5 *Operation time of occurrence*
6 *Remedial measures*

1. The user is in the diagnostic message.
   Press ⊞ (ⓘ symbol).
   ↳ The **Diagnostic list** submenu opens.
2. Select the desired diagnostic event with ⊞ or ⊟ and press Ⓔ .
   ↳ The message about the remedial measures opens.
3. Press ⊟ + ⊞ simultaneously.
   ↳ The message about the remedial measures closes.

The user is in the **Diagnostics** menu at an entry for a diagnostics event, e.g. in the **Diagnostic list** submenu or **Previous diagnostics** parameter.

1. Press Ⓔ.
   ↳ The message for the remedial measures for the selected diagnostic event opens.
2. Press ⊟ + ⊞ simultaneously.
   ↳ The message for the remedial measures closes.

12.4 Diagnostic information in the Web browser

12.4.1 Diagnostic options

Any faults detected by the measuring device are displayed in the Web browser on the home page once the user has logged on.

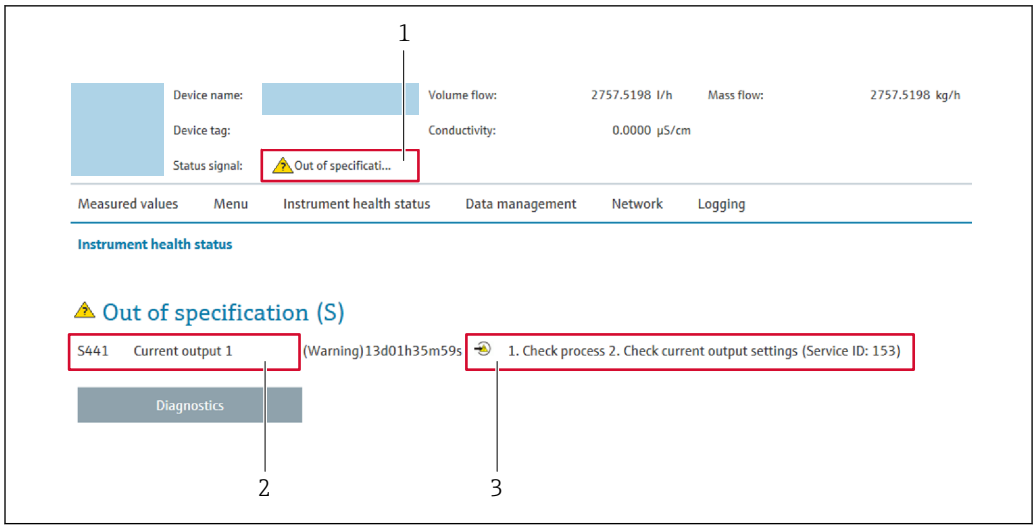

A0031056

1 *Status area with status signal*
2 *Diagnostic information*
3 *Remedy information with Service ID*

In addition, diagnostic events which have occurred can be shown in the **Diagnostics** menu:
- Via parameter → 📄 149
- Via submenu → 📄 150

Status signals

The status signals provide information on the state and reliability of the device by categorizing the cause of the diagnostic information (diagnostic event).

Symbol	Meaning
⊗	**Failure** A device error has occurred. The measured value is no longer valid.
	Function check The device is in service mode (e.g. during a simulation).
⚠	**Out of specification** The device is operated: ▪ Outside its technical specification limits (e.g. outside the process temperature range) ▪ Outside of the configuration carried out by the user (e.g. maximum flow in parameter **20 mA value**)
	Maintenance required Maintenance is required. The measured value is still valid.

The status signals are categorized in accordance with VDI/VDE 2650 and NAMUR Recommendation NE 107.

12.4.2 Calling up remedy information

Remedy information is provided for every diagnostic event to ensure that problems can be rectified quickly. These measures are displayed in red along with the diagnostic event and the related diagnostic information.

12.5 Diagnostic information in FieldCare or DeviceCare

12.5.1 Diagnostic options

Any faults detected by the measuring device are displayed on the home page of the operating tool once the connection has been established.

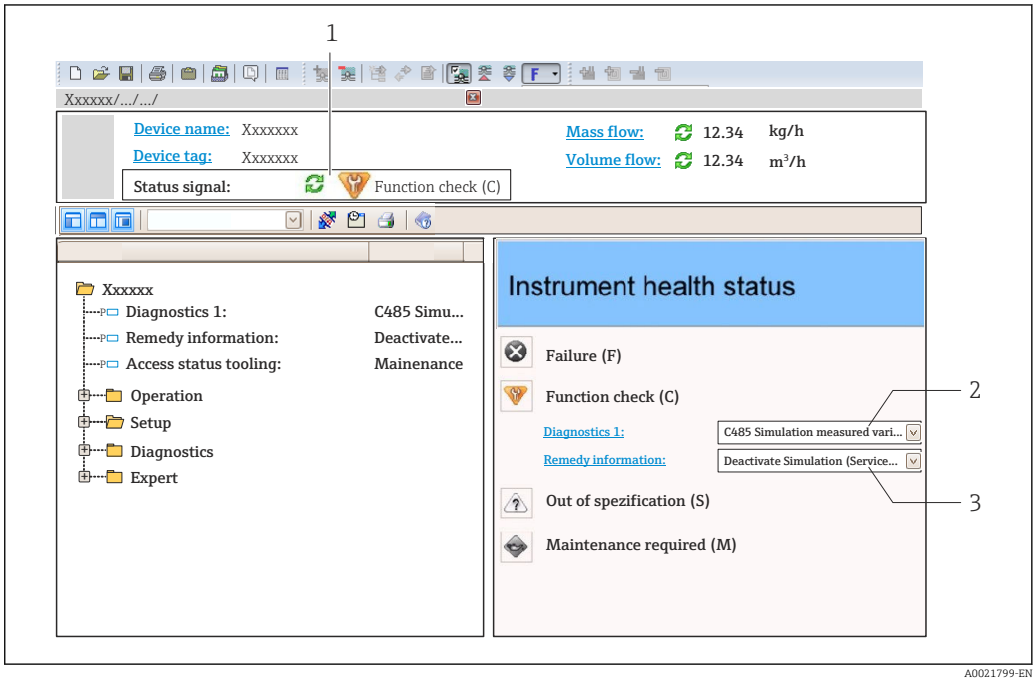

1 *Status area with status signal* → 📄 *139*
2 *Diagnostic information* → 📄 *140*
3 *Remedy information with Service ID*

In addition, diagnostic events which have occurred can be shown in the **Diagnostics** menu:
- Via parameter → 📄 149
- Via submenu → 📄 150

Diagnostic information

The fault can be identified using the diagnostic information. The short text helps you by providing information about the fault. In addition, the corresponding symbol for the diagnostic behavior is displayed in front of the diagnostic information on the local display.

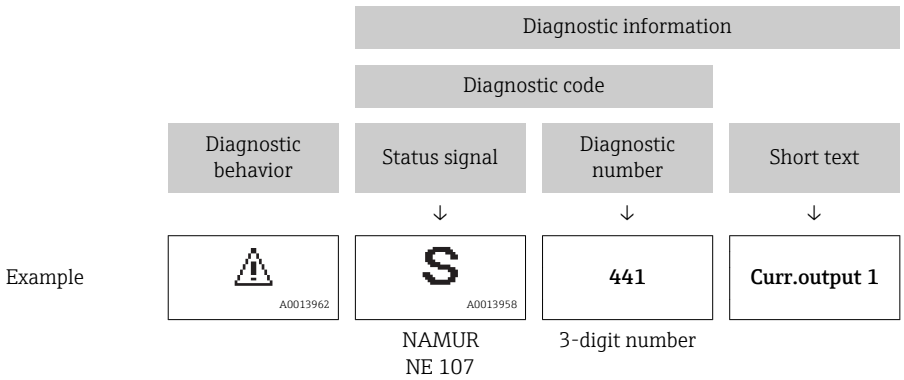

12.5.2 Calling up remedy information

Remedy information is provided for every diagnostic event to ensure that problems can be rectified quickly:

- On the home page
  Remedy information is displayed in a separate field below the diagnostics information.
- In the **Diagnostics** menu
  Remedy information can be called up in the working area of the user interface.

The user is in the **Diagnostics** menu.

1. Call up the desired parameter.
2. On the right in the working area, mouse over the parameter.
   ↳ A tool tip with remedy information for the diagnostic event appears.

12.6 Adapting the diagnostic information

12.6.1 Adapting the diagnostic behavior

Each item of diagnostic information is assigned a specific diagnostic behavior at the factory. The user can change this assignment for specific diagnostic information in the **Diagnostic behavior** submenu.

Expert → System → Diagnostic handling → Diagnostic behavior

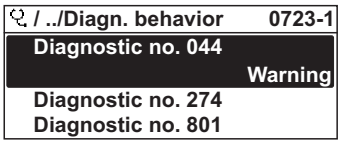

A0014048-EN

32 Taking the example of the local display

You can assign the following options to the diagnostic number as the diagnostic behavior:

Options	Description
Alarm	The device stops measurement. The signal outputs and totalizers assume the defined alarm condition. A diagnostic message is generated. The background lighting changes to red.
Warning	The device continues to measure. The signal outputs and totalizers are not affected. A diagnostic message is generated.
Logbook entry only	The device continues to measure. The diagnostic message is displayed only in the **Event logbook** submenu (**Event list** submenu) and is not displayed in alternation with the operational display.
Off	The diagnostic event is ignored, and no diagnostic message is generated or entered.

12.6.2 Adapting the status signal

Each item of diagnostic information is assigned a specific status signal at the factory. The user can change this assignment for specific diagnostic information in the **Diagnostic event category** submenu.

Expert → Communication → Diagnostic event category

Available status signals

Configuration as per HART 7 Specification (Condensed Status), in accordance with NAMUR NE107.

Symbol	Meaning
F A0013956	**Failure** A device error is present. The measured value is no longer valid.
C A0013959	**Function check** The device is in service mode (e.g. during a simulation).
S A0013958	**Out of specification** The device is being operated: ▪ Outside its technical specification limits (e.g. outside the process temperature range) ▪ Outside of the configuration carried out by the user (e.g. maximum flow in parameter **20 mA value**)
M A0013957	**Maintenance required** Maintenance is required. The measured value is still valid.
N A0023076	Has no effect on the condensed status.

12.7 Overview of diagnostic information

The amount of diagnostic information and the number of measured variables affected increase if the measuring device has one or more application packages.

In the case of some items of diagnostic information, the status signal and the diagnostic behavior can be changed. Change the diagnostic information → 144

Diagnostic number	Short text	Remedy instructions	Status signal [from the factory]	Diagnostic behavior [from the factory]
Diagnostic of sensor				
022	Temperature sensor defective	1. Check or replace sensor electronic module (ISEM) 2. If available: Check connection cable between sensor and transmitter 3. Replace sensor	F	Alarm
046	Sensor limit exceeded	1. Inspect sensor 2. Check process condition	S	Warning [1)]
062	Sensor connection faulty	1. Check or replace sensor electronic module (ISEM) 2. If available: Check connection cable between sensor and transmitter 3. Replace sensor	F	Alarm
063	Exciter current faulty	1. Check or replace sensor electronic module (ISEM) 2. If available: Check connection cable between sensor and transmitter 3. Replace sensor	S	Alarm
082	Data storage	1. Check module connections 2. Contact service	F	Alarm
083	Memory content	1. Restart device 2. Restore HistoROM S-DAT backup ('Device reset' parameter) 3. Replace HistoROM S-DAT	F	Alarm

Diagnostic number	Short text	Remedy instructions	Status signal [from the factory]	Diagnostic behavior [from the factory]
140	Sensor signal asymmetrical	1. Check or replace sensor electronic module (ISEM) 2. If available: Check connection cable between sensor and transmitter 3. Replace sensor	S	Alarm [1)]
144	Measurement error too high	1. Check or change sensor 2. Check process conditions	F	Alarm [1)]
Diagnostic of electronic				
201	Device failure	1. Restart device 2. Contact service	F	Alarm
242	Software incompatible	1. Check software 2. Flash or change main electronics module	F	Alarm
252	Modules incompatible	1. Check electronic modules 2. Check if correct modules are available (e.g. NEx, Ex) 3. Replace electronic modules	F	Alarm
252	Modules incompatible	1. Check if correct electronic modul is plugged 2. Replace electronic module	F	Alarm
262	Sensor electronic connection faulty	1. Check or replace connection cable between sensor electronic module (ISEM) and main electronics 2. Check or replace ISEM or main electronics	F	Alarm
270	Main electronic failure	Change main electronic module	F	Alarm
271	Main electronic failure	1. Restart device 2. Change main electronic module	F	Alarm
272	Main electronic failure	1. Restart device 2. Contact service	F	Alarm
273	Main electronic failure	Change electronic	F	Alarm
275	I/O module 1 to n defective	Change I/O module	F	Alarm
276	I/O module 1 to n faulty	1. Restart device 2. Change I/O module	F	Alarm
283	Memory content	1. Reset device 2. Contact service	F	Alarm
302	Device verification active	Device verification active, please wait.	C	Warning
303	I/O 1 to n configuration changed	1. Apply I/O module configuration (parameter 'Apply I/O configuration') 2. Afterwards reload device description and check wiring	M	Warning
311	Electronic failure	1. Do not reset device 2. Contact service	M	Warning
332	Writing in HistoROM backup failed	Replace user interface board Ex d/XP: replace transmitter	F	Alarm
361	I/O module 1 to n faulty	1. Restart device 2. Check electronic modules 3. Change I/O Modul or main electronics	F	Alarm

Diagnostic number	Short text	Remedy instructions	Status signal [from the factory]	Diagnostic behavior [from the factory]
372	Sensor electronic (ISEM) faulty	1. Restart device 2. Check if failure recurs 3. Replace sensor electronic module (ISEM)	F	Alarm
373	Sensor electronic (ISEM) faulty	1. Transfer data or reset device 2. Contact service	F	Alarm
374	Sensor electronic (ISEM) faulty	1. Restart device 2. Check if failure recurs 3. Replace sensor electronic module (ISEM)	S	Warning [1)]
375	I/O- 1 to n communication failed	1. Restart device 2. Check if failure recurs 3. Replace module rack inclusive electronic modules	F	Alarm
378	Supply voltage ISEM faulty	Check supply voltage to the ISEM	F	Alarm
382	Data storage	1. Insert T-DAT 2. Replace T-DAT	F	Alarm
383	Memory content	1. Restart device 2. Delete T-DAT via 'Reset device' parameter 3. Replace T-DAT	F	Alarm
387	HistoROM data faulty	Contact service organization	F	Alarm
Diagnostic of configuration				
330	Flash file invalid	1. Update firmware of device 2. Restart device	M	Warning
331	Firmware update failed	1. Update firmware of device 2. Restart device	F	Warning
410	Data transfer	1. Check connection 2. Retry data transfer	F	Alarm
412	Processing download	Download active, please wait	C	Warning
431	Trim 1 to n	Carry out trim	C	Warning
437	Configuration incompatible	1. Restart device 2. Contact service	F	Alarm
438	Dataset	1. Check data set file 2. Check device configuration 3. Up- and download new configuration	M	Warning
441	Current output 1 to n	1. Check process 2. Check current output settings	S	Warning [1)]
442	Frequency output 1 to n	1. Check process 2. Check frequency output settings	S	Warning [1)]
443	Pulse output 1 to n	1. Check process 2. Check pulse output settings	S	Warning [1)]
444	Current input 1 to n	1. Check process 2. Check current input settings	S	Warning [1)]
453	Flow override	Deactivate flow override	C	Warning
484	Failure mode simulation	Deactivate simulation	C	Alarm
485	Measured variable simulation	Deactivate simulation	C	Warning

Diagnostic number	Short text	Remedy instructions	Status signal [from the factory]	Diagnostic behavior [from the factory]
486	Current input 1 to n simulation	Deactivate simulation	C	Warning
491	Current output 1 to n simulation	Deactivate simulation	C	Warning
492	Simulation frequency output 1 to n	Deactivate simulation frequency output	C	Warning
493	Simulation pulse output 1 to n	Deactivate simulation pulse output	C	Warning
494	Switch output simulation 1 to n	Deactivate simulation switch output	C	Warning
495	Diagnostic event simulation	Deactivate simulation	C	Warning
496	Status input simulation	Deactivate simulation status input	C	Warning
502	CT activation/ deactivation failed	Follow the sequence of the custody transfer activation/deactivation: First authorized user login, then set the DIP switch on the main electonic module	C	Warning
520	I/O 1 to n hardware configuration invalid	1. Check I/O hardware configuration 2. Replace wrong I/O module 3. Plug the module of double pulse output on correct slot	F	Alarm
528	Concentration calculation not possible	Out of valid range of the selected calculation algorithm 1. Check concentration settings 2. Check measured values, e.g. density or temperature	S	Alarm
529	Concentration calculation not accurate	Out of valid range of the selected calculation algorithm 1. Check concentration settings 2. Check measured values, e.g. density or temperature	S	Warning
537	Configuration	1. Check IP addresses in network 2. Change IP address	F	Warning
540	Custody transfer mode failed	1. Power off device and toggle DIP switch 2. Deactivate custody transfer mode 3. Reactivate custody transfer mode 4. Check electronic components	F	Alarm
543	Double pulse output	1. Check process 2. Check pulse output settings	S	Warning [1)]
593	Double pulse output simulation	Deactivate simulation pulse output	C	Warning
594	Relay output simulation	Deactivate simulation switch output	C	Warning
599	Custody transfer logbook full	1. Deactivate custody transfer mode 2. Clear custody transfer logbook (all 30 entries) 3. Activate custody transfer mode	F	Warning
Diagnostic of process				
803	Current loop	1. Check wiring 2. Change I/O module	F	Alarm
830	Sensor temperature too high	Reduce ambient temp. around the sensor housing	S	Warning [1)]

Diagnostic number	Short text	Remedy instructions	Status signal [from the factory]	Diagnostic behavior [from the factory]
831	Sensor temperature too low	Increase ambient temp. around the sensor housing	S	Warning [1]
832	Electronic temperature too high	Reduce ambient temperature	S	Warning [1]
833	Electronic temperature too low	Increase ambient temperature	S	Warning [1]
834	Process temperature too high	Reduce process temperature	S	Warning [1]
835	Process temperature too low	Increase process temperature	S	Warning [1]
842	Process limit	Low flow cut off active! 1. Check low flow cut off configuration	S	Warning [1]
862	Partly filled pipe	1. Check for gas in process 2. Adjust detection limits	S	Warning [1]
882	Input signal	1. Check input configuration 2. Check external device or process conditions	F	Alarm
910	Tubes not oscillating	1. Check electronic 2. Inspect sensor	F	Alarm
912	Medium inhomogeneous	1. Check process cond. 2. Increase system pressure	S	Warning [1]
913	Medium unsuitable	1. Check process conditions 2. Check electronic modules or sensor	S	Warning [1]
941	API temperature out of specification	1. Check process temperature with selected API commodity group 2. Check API related parameters	S	Warning [1]
942	API density out of specification	1. Check process density with selected API commodity group 2. Check API related parameters	S	Warning [1]
943	API pressure out of specification	1. Check process pressure with selected API commodity group 2. Check API related parameters	S	Warning [1]
944	Monitoring failed	Check process conditions for Heartbeat Monitoring	S	Warning [1]
948	Oscillation damping too high	Check process conditions	S	Warning [1]

1) Diagnostic behavior can be changed.

12.8 Pending diagnostic events

The **Diagnostics** menu allows the user to view the current diagnostic event and the previous diagnostic event separately.

To call up the measures to rectify a diagnostic event:
- Via local display → 141
- Via Web browser → 142
- Via "FieldCare" operating tool → 144
- Via "DeviceCare" operating tool → 144

Other pending diagnostic events can be displayed in the **Diagnostic list** submenu → 150

Navigation
"Diagnostics" menu

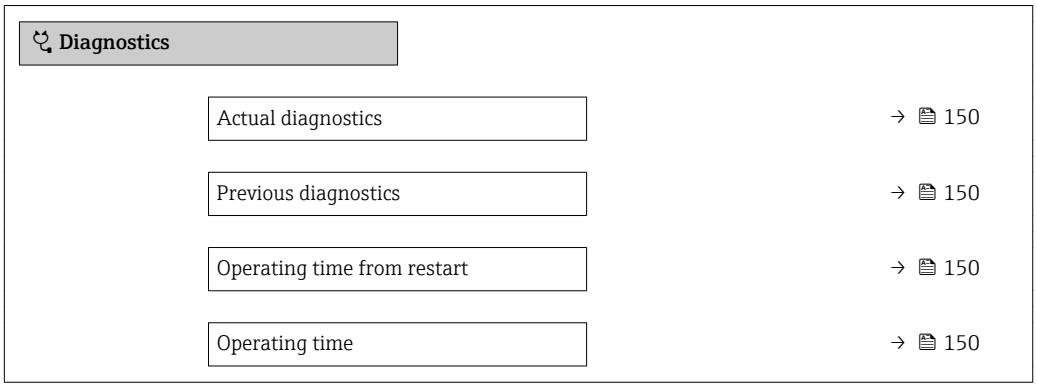

Parameter overview with brief description

Parameter	Prerequisite	Description	User interface
Actual diagnostics	A diagnostic event has occurred.	Shows the current occured diagnostic event along with its diagnostic information. If two or more messages occur simultaneously, the message with the highest priority is shown on the display.	Symbol for diagnostic behavior, diagnostic code and short message.
Previous diagnostics	Two diagnostic events have already occurred.	Shows the diagnostic event that occurred prior to the current diagnostic event along with its diagnostic information.	Symbol for diagnostic behavior, diagnostic code and short message.
Operating time from restart	–	Shows the time the device has been in operation since the last device restart.	Days (d), hours (h), minutes (m) and seconds (s)
Operating time	–	Indicates how long the device has been in operation.	Days (d), hours (h), minutes (m) and seconds (s)

12.9 Diagnostic list

Up to 5 currently pending diagnostic events can be displayed in the **Diagnostic list** submenu along with the associated diagnostic information. If more than 5 diagnostic events are pending, the events with the highest priority are shown on the display.

Navigation path
Diagnostics → Diagnostic list

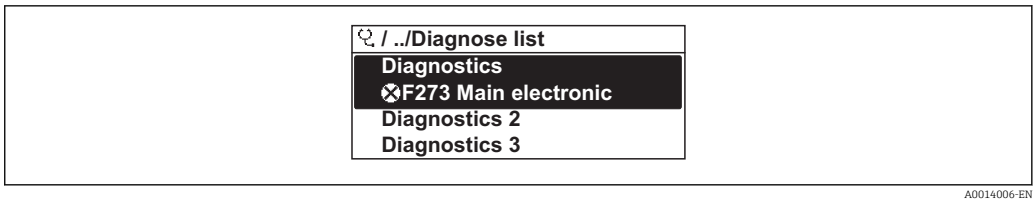

33 *Taking the example of the local display*

To call up the measures to rectify a diagnostic event:
- Via local display → 141
- Via Web browser → 142
- Via "FieldCare" operating tool → 144
- Via "DeviceCare" operating tool → 144

12.10 Event logbook

12.10.1 Reading out the event logbook

A chronological overview of the event messages that have occurred is provided in the **Events list** submenu.

Navigation path
Diagnostics menu → **Event logbook** submenu → Event list

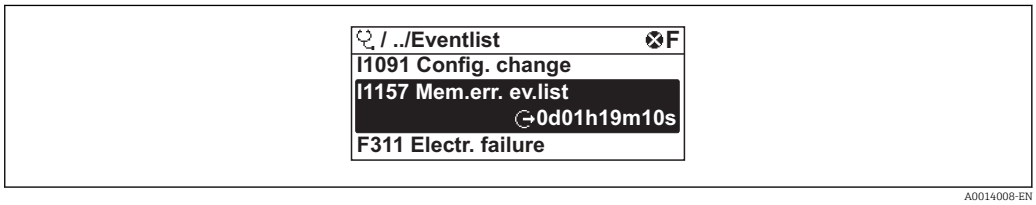

34 *Taking the example of the local display*

- A maximum of 20 event messages can be displayed in chronological order.
- If the **Extended HistoROM** application package (order option) is enabled in the device, the event list can contain up to 100 entries .

The event history includes entries for:
- Diagnostic events → 145
- Information events → 152

In addition to the operation time of its occurrence, each event is also assigned a symbol that indicates whether the event has occurred or is ended:
- Diagnostic event
  - ⊖: Occurrence of the event
  - ⊖: End of the event
- Information event
  ⊖: Occurrence of the event

To call up the measures to rectify a diagnostic event:
- Via local display → 141
- Via Web browser → 142
- Via "FieldCare" operating tool → 144
- Via "DeviceCare" operating tool → 144

For filtering the displayed event messages → 152

12.10.2 Filtering the event logbook

Using the **Filter options** parameter you can define which category of event message is displayed in the **Events list** submenu.

Navigation path
Diagnostics → Event logbook → Filter options

Filter categories
- All
- Failure (F)
- Function check (C)
- Out of specification (S)
- Maintenance required (M)
- Information (I)

12.10.3 Overview of information events

Unlike a diagnostic event, an information event is displayed in the event logbook only and not in the diagnostic list.

Info number	Info name
I1000	--------(Device ok)
I1079	Sensor changed
I1089	Power on
I1090	Configuration reset
I1091	Configuration changed
I1092	HistoROM backup deleted
I1111	Density adjust failure
I1137	Electronic changed
I1151	History reset
I1155	Reset electronic temperature
I1156	Memory error trend
I1157	Memory error event list
I1209	Density adjustment ok
I1221	Zero point adjust failure
I1222	Zero point adjustment ok
I1256	Display: access status changed
I1264	Safety sequence aborted
I1278	I/O module restarted
I1335	Firmware changed
I1361	Web server: login failed
I1397	Fieldbus: access status changed
I1398	CDI: access status changed
I1444	Device verification passed
I1445	Device verification failed
I1447	Record application reference data
I1448	Application reference data recorded
I1449	Recording application ref. data failed
I1450	Monitoring off

Info number	Info name
I1451	Monitoring on
I1457	Measurement error verification failed
I1459	I/O module verification failed
I1460	HBSI verification failed
I1461	Sensor verification failed
I1462	Sensor electronic module verific. failed
I1512	Download started
I1513	Download finished
I1514	Upload started
I1515	Upload finished
I1517	Custody transfer active
I1518	Custody transfer inactive
I1554	Safety sequence started
I1555	Safety sequence confirmed
I1556	Safety mode off
I1618	I/O module 2 replaced
I1619	I/O module 3 replaced
I1621	I/O module 4 replaced
I1622	Calibration changed
I1624	Reset all totalizers
I1625	Write protection activated
I1626	Write protection deactivated
I1627	Web server: login successful
I1628	Display: login successful
I1629	CDI: login successful
I1631	Web server access changed
I1632	Display: login failed
I1633	CDI: login failed
I1634	Reset to factory settings
I1635	Reset to delivery settings
I1639	Max. switch cycles number reached
I1643	Custody transfer logbook cleared
I1649	Hardware write protection activated
I1650	Hardware write protection deactivated
I1651	Custody transfer parameter changed
I1712	New flash file received
I1725	Sensor electronic module (ISEM) changed
I1726	Configuration backup failed

12.11 Resetting the measuring device

Using the**Device reset** parameter (→ 117) it is possible to reset the entire device configuration or some of the configuration to a defined state.

12.11.1 Function scope of the "Device reset" parameter

Options	Description
Cancel	No action is executed and the user exits the parameter.
To delivery settings	Every parameter for which a customer-specific default setting was ordered is reset to this customer-specific value. All other parameters are reset to the factory setting.
Restart device	The restart resets every parameter whose data are in the volatile memory (RAM) to the factory setting (e.g. measured value data). The device configuration remains unchanged.
Restore S-DAT backup	Restore the data that are saved on the S-DAT. The data record is restored from the electronics memory to the S-DAT. This option is displayed only in an alarm condition.

12.12 Device information

The **Device information** submenu contains all parameters that display different information for device identification.

Navigation
"Diagnostics" menu → Device information

▶ Device information	
Device tag	→ 155
Serial number	→ 155
Firmware version	→ 155
Device name	→ 155
Manufacturer	
Order code	→ 155
Extended order code 1	→ 155
Extended order code 2	→ 155
Extended order code 3	→ 155
ENP version	→ 155
Device revision	→ 155
Device ID	→ 155

Device type	→ 155
Manufacturer ID	→ 155

Parameter overview with brief description

Parameter	Description	User interface	Factory setting
Device tag	Shows name of measuring point.	Max. 32 characters, such as letters, numbers or special characters (e.g. @, %, /).	Promass
Serial number	Shows the serial number of the measuring device.	Max. 11-digit character string comprising letters and numbers.	–
Firmware version	Shows the device firmware version installed.	Character string in the format xx.yy.zz	–
Device name	Shows the name of the transmitter. The name can be found on the nameplate of the transmitter.	Promass 300/500	–
Order code	Shows the device order code. The order code can be found on the nameplate of the sensor and transmitter in the "Order code" field.	Character string composed of letters, numbers and certain punctuation marks (e.g. /).	–
Extended order code 1	Shows the 1st part of the extended order code. The extended order code can also be found on the nameplate of the sensor and transmitter in the "Ext. ord. cd." field.	Character string	–
Extended order code 2	Shows the 2nd part of the extended order code. The extended order code can also be found on the nameplate of the sensor and transmitter in the "Ext. ord. cd." field.	Character string	–
Extended order code 3	Shows the 3rd part of the extended order code. The extended order code can also be found on the nameplate of the sensor and transmitter in the "Ext. ord. cd." field.	Character string	–
ENP version	Shows the version of the electronic nameplate (ENP).	Character string	2.02.00
Device revision	Shows the device revision with which the device is registered with the HART Communication Foundation.	2-digit hexadecimal number	6
Device ID	Shows the device ID for identifying the device in a HART network.	6-digit hexadecimal number	–
Device type	Shows the device type with which the measuring device is registered with the HART Communication Foundation.	2-digit hexadecimal number	0x3B (for Promass 300/500)
Manufacturer ID	Shows the manufacturer ID device is registered with the HART Communication Foundation.	2-digit hexadecimal number	0x11 (for Endress+Hauser)

12.13 Firmware history

Release date	Firmware version	Order code for "Firmware version"	Firmware changes	Documentation type	Documentation
09.2019	01.05.zz	Option **66**	▪ Gas Fraction Handler Adaptive Filter, Gas Entrainment Index ▪ Application-specific Input module ▪ Upgrading of the Petroleum application package	Operating Instructions	BA01816D/06/EN/02.19
05.2018	01.01.zz	Option **71**	Original firmware	Operating Instructions	BA01816D/06/EN/01.18

It is possible to flash the firmware to the current version or the previous version using the service interface. For the compatibility of the firmware version, see the "Device history and compatibility" section → 📄 156

For the compatibility of the firmware version with the previous version, the installed device description files and operating tools, observe the information about the device in the "Manufacturer's information" document.

The manufacturer's information is available:
- In the Download Area of the Endress+Hauser web site: www.endress.com → Downloads
- Specify the following details:
  - Product root: e.g. 8A3B
    The product root is the first part of the order code: see the nameplate on the device.
  - Text search: Manufacturer's information
  - Media type: Documentation – Technical Documentation

12.14 Device history and compatibility

The device model is documented in the order code on the nameplate of the device (e.g. 8F3BXX-XXX....XXXA1-XXXXXX).

Device model	Release	Change compared with earlier model	Compatibility with earlier model
A2	09.2019	I/O module with enhanced performance and functionality: see device firmware 01.05.zz → 📄 156	No
A1	08.2018	–	–

13 Maintenance

13.1 Maintenance tasks

No special maintenance work is required.

13.1.1 Exterior cleaning

When cleaning the exterior of measuring devices, always use cleaning agents that do not attack the surface of the housing or the seals.

13.1.2 Interior cleaning

Observe the following points for CIP and SIP cleaning:
- Use only cleaning agents to which the process-wetted materials are adequately resistant.
- Observe the maximum permitted medium temperature for the measuring device → 179.

13.2 Measuring and test equipment

Endress+Hauser offers a wide variety of measuring and test equipment, such as W@M or device tests.

Your Endress+Hauser Sales Center can provide detailed information on the services.

List of some of the measuring and testing equipment: → 160→ 162

13.3 Endress+Hauser services

Endress+Hauser offers a wide variety of services for maintenance such as recalibration, maintenance service or device tests.

Your Endress+Hauser Sales Center can provide detailed information on the services.

14 Repair

14.1 General notes

14.1.1 Repair and conversion concept

The Endress+Hauser repair and conversion concept provides for the following:
- The measuring devices have a modular design.
- Spare parts are grouped into logical kits with the associated Installation Instructions.
- Repairs are carried out by Endress+Hauser Service or by appropriately trained customers.
- Certified devices can only be converted to other certified devices by Endress+Hauser Service or at the factory.

14.1.2 Notes for repair and conversion

For repair and modification of a measuring device, observe the following notes:
- ▶ Use only original Endress+Hauser spare parts.
- ▶ Carry out the repair according to the Installation Instructions.
- ▶ Observe the applicable standards, federal/national regulations, Ex documentation (XA) and certificates.
- ▶ Document every repair and each conversion and enter them into the *W@M* life cycle management database.

14.2 Spare parts

W@M Device Viewer (www.endress.com/deviceviewer):
All the spare parts for the measuring device, along with the order code, are listed here and can be ordered. If available, users can also download the associated Installation Instructions.

Measuring device serial number:
- Is located on the nameplate of the device.
- Can be read out via the **Serial number** parameter (→ 155) in the **Device information** submenu.

14.3 Endress+Hauser services

Endress+Hauser offers a wide range of services.

Your Endress+Hauser Sales Center can provide detailed information on the services.

14.4 Return

The requirements for safe device return can vary depending on the device type and national legislation.

1. Refer to the website for more information:
   http://www.endress.com/support/return-material
2. Return the device if repairs or a factory calibration are required, or if the wrong device was ordered or delivered.

14.5 Disposal

If required by the Directive 2012/19/EU on waste electrical and electronic equipment (WEEE), the product is marked with the depicted symbol in order to minimize the disposal of WEEE as unsorted municipal waste. Do not dispose of products bearing this marking as unsorted municipal waste. Instead, return them to Endress+Hauser for disposal under the applicable conditions.

14.5.1 Removing the measuring device

1. Switch off the device.

⚠ WARNING

Danger to persons from process conditions.

- Beware of hazardous process conditions such as pressure in the measuring device, high temperatures or aggressive fluids.

2. Carry out the mounting and connection steps from the "Mounting the measuring device" and "Connecting the measuring device" sections in reverse order. Observe the safety instructions.

14.5.2 Disposing of the measuring device

⚠ WARNING

Danger to personnel and environment from fluids that are hazardous to health.

- Ensure that the measuring device and all cavities are free of fluid residues that are hazardous to health or the environment, e.g. substances that have permeated into crevices or diffused through plastic.

Observe the following notes during disposal:

- Observe valid federal/national regulations.
- Ensure proper separation and reuse of the device components.

15 Accessories

Various accessories, which can be ordered with the device or subsequently from Endress +Hauser, are available for the device. Detailed information on the order code in question is available from your local Endress+Hauser sales center or on the product page of the Endress+Hauser website: www.endress.com.

15.1 Device-specific accessories

15.1.1 For the transmitter

Accessories	Description
Proline 300 transmitter	Transmitter for replacement or storage. Use the order code to define the following specifications: ▪ Approvals ▪ Output ▪ Input ▪ Display/operation ▪ Housing ▪ Software Order code: 8X3BXX Installation Instructions EA01200D
Remote display and operating module DKX001	▪ If ordered directly with the measuring device: Order code for "Display; operation", option O "Remote display 4-line illum.; 10 m (30 ft) Cable; touch control" ▪ If ordered separately: ▪ Measuring device: order code for "Display; operation", option M "W/o, prepared for remote display" ▪ DKX001: Via the separate product structure DKX001 ▪ If ordered subsequently: DKX001: Via the separate product structure DKX001 **Mounting bracket for DKX001** ▪ If ordered directly: order code for "Accessory enclosed", option RA "Mounting bracket, pipe 1/2"' ▪ If ordered subsequently: order number: 71340960 **Connecting cable (replacement cable)** Via the separate product structure: DKX002 Further information on display and operating module DKX001→ 📄 186. Special Documentation SD01763D
External WLAN antenna	External WLAN antenna with 1.5 m (59.1 in) connecting cable and two angle brackets. Order code for "Accessory enclosed", option P8 "Wireless antenna wide area". ▪ The external WLAN antenna is not suitable for use in hygienic applications. ▪ Further information on the WLAN interface → 📄 65. Order number: 71351317 Installation Instructions EA01238D
Protective cover	Is used to protect the measuring device from the effects of the weather: e.g. rainwater, excess heating from direct sunlight. Order number: 71343505 Installation Instructions EA01160D

15.1.2 For the sensor

Accessories	Description
Heating jacket	Is used to stabilize the temperature of the fluids in the sensor. Water, water vapor and other non-corrosive liquids are permitted for use as fluids. If using oil as a heating medium, please consult with Endress+Hauser. ▪ If ordered together with the measuring device: order code for "Enclosed accessories" ▪ Option RB "heating jacket, G 1/2" internal thread" ▪ Option RD "Heating jacket, NPT 1/2" internal thread" ▪ If ordered subsequently: Use the order code with the product root DK8003. Special Documentation SD02173D
Sensor holder	For wall, tabletop and pipe mounting. Order number: 71392563

15.2 Communication-specific accessories

Accessories	Description
Commubox FXA195 HART	For intrinsically safe HART communication with FieldCare via the USB interface. Technical Information TI00404F
HART Loop Converter HMX50	Is used to evaluate and convert dynamic HART process variables to analog current signals or limit values. ▪ Technical Information TI00429F ▪ Operating Instructions BA00371F
Fieldgate FXA42	Is used to transmit the measured values of connected 4 to 20 mA analog measuring devices, as well as digital measuring devices ▪ Technical Information TI01297S ▪ Operating Instructions BA01778S ▪ Product page: www.endress.com/fxa42
Field Xpert SMT70	The Field Xpert SMT70 tablet PC for device configuration enables mobile plant asset management in hazardous and non-hazardous areas. It is suitable for commissioning and maintenance staff to manage field instruments with a digital communication interface and to record progress. This tablet PC is designed as an all-in-one solution with a preinstalled driver library and is an easy-to-use, touch-sensitive tool which can be used to manage field instruments throughout their entire life cycle. ▪ Technical Information TI01342S ▪ Operating Instructions BA01709S ▪ Product page: www.endress.com/smt70
Field Xpert SMT77	The Field Xpert SMT77 tablet PC for device configuration enables mobile plant asset management in areas categorized as Ex Zone 1. ▪ Technical Information TI01418S ▪ Operating Instructions BA01923S ▪ Product page: www.endress.com/smt77

15.3 Service-specific accessories

Accessories	Description
Applicator	Software for selecting and sizing Endress+Hauser measuring devices: ▪ Choice of measuring devices for industrial requirements ▪ Calculation of all the necessary data for identifying the optimum flowmeter: e.g. nominal diameter, pressure loss, flow velocity and accuracy. ▪ Graphic illustration of the calculation results ▪ Determination of the partial order code, administration, documentation and access to all project-related data and parameters over the entire life cycle of a project. Applicator is available: ▪ Via the Internet: https://portal.endress.com/webapp/applicator ▪ As a downloadable DVD for local PC installation.
W@M	W@M Life Cycle Management Improved productivity with information at your fingertips. Data relevant to a plant and its components is generated from the first stages of planning and during the asset's complete life cycle. W@M Life Cycle Management is an open and flexible information platform with online and on-site tools. Instant access for your staff to current, in-depth data shortens your plant's engineering time, speeds up procurement processes and increases plant uptime. Combined with the right services, W@M Life Cycle Management boosts productivity in every phase. For more information, visit www.endress.com/lifecyclemanagement
FieldCare	FDT-based plant asset management tool from Endress+Hauser. It can configure all smart field units in your system and helps you manage them. By using the status information, it is also a simple but effective way of checking their status and condition. Operating Instructions BA00027S and BA00059S
DeviceCare	Tool to connect and configure Endress+Hauser field devices. Innovation brochure IN01047S

15.4 System components

Accessories	Description
Memograph M graphic data manager	The Memograph M graphic data manager provides information on all the relevant measured variables. Measured values are recorded correctly, limit values are monitored and measuring points analyzed. The data are stored in the 256 MB internal memory and also on a SD card or USB stick. ▪ Technical Information TI00133R ▪ Operating Instructions BA00247R
Cerabar M	The pressure transmitter for measuring the absolute and gauge pressure of gases, steam and liquids. It can be used to read in the operating pressure value. ▪ Technical Information TI00426P and TI00436P ▪ Operating Instructions BA00200P and BA00382P
Cerabar S	The pressure transmitter for measuring the absolute and gauge pressure of gases, steam and liquids. It can be used to read in the operating pressure value. ▪ Technical Information TI00383P ▪ Operating Instructions BA00271P
iTEMP	The temperature transmitters can be used in all applications and are suitable for the measurement of gases, steam and liquids. They can be used to read in the medium temperature. "Fields of Activity" document FA00006T

16 Technical data

16.1 Application

The measuring device is intended only for the flow measurement of liquids and gases.

Depending on the version ordered, the measuring device can also measure potentially explosive, flammable, poisonous and oxidizing media.

To ensure that the device remains in proper operating condition for its service life, use the measuring device only for media against which the process-wetted materials are sufficiently resistant.

16.2 Function and system design

Measuring principle	Mass flow measurement based on the Coriolis measuring principle
Measuring system	The device consists of a transmitter and a sensor. The device is available as a compact version: The transmitter and sensor form a mechanical unit. For information on the structure of the device → 📄 15

16.3 Input

Measured variable

Direct measured variables

- Mass flow
- Density
- Temperature

Calculated measured variables

- Volume flow
- Corrected volume flow
- Reference density

Measuring range

Measuring range for liquids

DN		Measuring range full scale values $\dot{m}_{min(F)}$ to $\dot{m}_{max(F)}$	
[mm]	[in]	[kg/h]	[lb/min]
1	1/24	0 to 20	0 to 0.735
2	1/12	0 to 100	0 to 3.675
4	1/8	0 to 450	0 to 16.54

Measuring range for gases

The full scale value depends on the density and the sound velocity of the gas used and can be calculated with the formula below:

$\dot{m}_{max(G)}$ = minimum ($\dot{m}_{max(F)} \cdot \rho_G : x$; $\rho_G \cdot c_G \cdot \pi/2 \cdot (d_i)^2 \cdot 3600$)

$\dot{m}_{max(G)}$	Maximum full scale value for gas [kg/h]
$\dot{m}_{max(F)}$	Maximum full scale value for liquid [kg/h]
$\dot{m}_{max(G)} < \dot{m}_{max(F)}$	$\dot{m}_{max(G)}$ can never be greater than $\dot{m}_{max(F)}$
ρ_G	Gas density in [kg/m³] at operating conditions
x	Constant dependent on nominal diameter
c_G	Sound velocity (gas) [m/s]
d_i	Measuring tube internal diameter [m]

DN		x
[mm]	[in]	[kg/m³]
1	1/24	32
2	1/12	32
4	1/8	32

Calculation example for gas

- Sensor: Promass A, DN 2
- Gas: Air with a density of 11.9 kg/m³ (at 20 °C and 10 bar)
- Measuring range (liquid): 100 kg/h
- x = 32 kg/m³ (for Promass A DN 2)

Maximum possible full scale value:

$\dot{m}_{max(G)} = \dot{m}_{max(F)} \cdot \rho_G : x = 100\ kg/h \cdot 11.9\ kg/m^3 : 32\ kg/m^3 = 37.2\ kg/h$

Recommended measuring range

Flow limit → 181

Operable flow range

Over 1000 : 1.

Flow rates above the preset full scale value do not override the electronics unit, with the result that the totalizer values are registered correctly.

Input signal

External measured values

To increase the accuracy of certain measured variables or to calculate the corrected volume flow for gases, the automation system can continuously write different measured values to the measuring device:
- Operating pressure to increase accuracy (Endress+Hauser recommends the use of a pressure measuring device for absolute pressure, e.g. Cerabar M or Cerabar S)
- Medium temperature to increase accuracy (e.g. iTEMP)
- Reference density for calculating the corrected volume flow for gases

Various pressure and temperature measuring devices can be ordered from Endress+Hauser: see "Accessories" section → 162

It is recommended to read in external measured values to calculate the corrected volume flow.

HART protocol

The measured values are written from the automation system to the measuring device via the HART protocol. The pressure transmitter must support the following protocol-specific functions:
- HART protocol
- Burst mode

Current input

The measured values are written from the automation system to the measuring device via the current input → 165.

Current input 0/4 to 20 mA

Current input	0/4 to 20 mA (active/passive)
Current span	▪ 4 to 20 mA (active) ▪ 0/4 to 20 mA (passive)
Resolution	1 µA
Voltage drop	Typically: 0.6 to 2 V for 3.6 to 22 mA (passive)
Maximum input voltage	≤ 30 V (passive)
Open-circuit voltage	≤ 28.8 V (active)
Possible input variables	▪ Pressure ▪ Temperature ▪ Density

Status input

Maximum input values	▪ DC −3 to 30 V ▪ If status input is active (ON): R_i >3 kΩ
Response time	Configurable: 5 to 200 ms

Input signal level	▪ Low signal: DC −3 to +5 V ▪ High signal: DC 12 to 30 V
Assignable functions	▪ Off ▪ Reset the individual totalizers separately ▪ Reset all totalizers ▪ Flow override

16.4 Output

Output signal

Current output 4 to 20 mA HART

Order code	"Output; input 1" (20): Option BA: current output 4 to 20 mA HART
Signal mode	Can be set to: ▪ Active ▪ Passive
Current range	Can be set to: ▪ 4 to 20 mA NAMUR ▪ 4 to 20 mA US ▪ 4 to 20 mA ▪ 0 to 20 mA (only if the signal mode is active) ▪ Fixed current
Open-circuit voltage	DC 28.8 V (active)
Maximum input voltage	DC 30 V (passive)
Load	250 to 700 Ω
Resolution	0.38 µA
Damping	Configurable: 0 to 999.9 s
Assignable measured variables	▪ Mass flow ▪ Volume flow ▪ Corrected volume flow ▪ Density ▪ Reference density ▪ Temperature ▪ Electronics temperature ▪ Oscillation frequency 0 ▪ Oscillation damping 0 ▪ Signal asymmetry ▪ Exciter current 0 The range of options increases if the measuring device has one or more application packages.

Current output 4 to 20 mA HART Ex i

Order code	"Output; input 1" (20) choose from: ▪ Option CA: current output 4 to 20 mA HART Ex i passive ▪ Option CC: current output 4 to 20 mA HART Ex i active
Signal mode	Depends on the selected order version.
Current range	Can be set to: ▪ 4 to 20 mA NAMUR ▪ 4 to 20 mA US ▪ 4 to 20 mA ▪ 0 to 20 mA (only if the signal mode is active) ▪ Fixed current
Open-circuit voltage	DC 21.8 V (active)
Maximum input voltage	DC 30 V (passive)
Load	▪ 250 to 400 Ω (active) ▪ 250 to 700 Ω (passive)
Resolution	0.38 µA

Damping	Configurable: 0 to 999.9 s
Assignable measured variables	▪ Mass flow ▪ Volume flow ▪ Corrected volume flow ▪ Density ▪ Reference density ▪ Temperature ▪ Electronics temperature ▪ Oscillation frequency 0 ▪ Oscillation damping 0 ▪ Signal asymmetry ▪ Exciter current 0 The range of options increases if the measuring device has one or more application packages.

Current output 4 to 20 mA

Order code	"Output; input 2" (21), "Output; input 3" (022): Option B: current output 4 to 20 mA
Signal mode	Can be set to: ▪ Active ▪ Passive
Current span	Can be set to: ▪ 4 to 20 mA NAMUR ▪ 4 to 20 mA US ▪ 4 to 20 mA ▪ 0 to 20 mA (only if the signal mode is active) ▪ Fixed current
Maximum output values	22.5 mA
Open-circuit voltage	DC 28.8 V (active)
Maximum input voltage	DC 30 V (passive)
Load	0 to 700 Ω
Resolution	0.38 µA
Damping	Configurable: 0 to 999.9 s
Assignable measured variables	▪ Mass flow ▪ Volume flow ▪ Corrected volume flow ▪ Density ▪ Reference density ▪ Temperature ▪ Electronics temperature ▪ Oscillation frequency 0 ▪ Oscillation damping 0 ▪ Signal asymmetry ▪ Exciter current 0 The range of options increases if the measuring device has one or more application packages.

Current output 4 to 20 mA Ex i passive

Order code	"Output; input 2" (21), "Output; input 3" (022): Option C: current output 4 to 20 mA Ex i passive
Signal mode	Passive
Current span	Can be set to: ▪ 4 to 20 mA NAMUR ▪ 4 to 20 mA US ▪ 4 to 20 mA ▪ Fixed current

Maximum output values	22.5 mA
Maximum input voltage	DC 30 V
Load	0 to 700 Ω
Resolution	0.38 µA
Damping	Configurable: 0 to 999 s
Assignable measured variables	▪ Mass flow ▪ Volume flow ▪ Corrected volume flow ▪ Density ▪ Reference density ▪ Temperature ▪ Electronics temperature ▪ Oscillation frequency 0 ▪ Oscillation damping 0 ▪ Signal asymmetry ▪ Exciter current 0 The range of options increases if the measuring device has one or more application packages.

Pulse/frequency/switch output

Function	Can be set to pulse, frequency or switch output
Version	Open collector Can be set to: ▪ Active ▪ Passive ▪ Passive NAMUR Ex-i, passive
Maximum input values	DC 30 V, 250 mA (passive)
Open-circuit voltage	DC 28.8 V (active)
Voltage drop	For 22.5 mA: ≤ DC 2 V
Pulse output	
Maximum input values	DC 30 V, 250 mA (passive)
Maximum output current	22.5 mA (active)
Open-circuit voltage	DC 28.8 V (active)
Pulse width	Configurable: 0.05 to 2 000 ms
Maximum pulse rate	10 000 Impulse/s
Pulse value	Adjustable
Assignable measured variables	▪ Mass flow ▪ Volume flow ▪ Corrected volume flow
Frequency output	
Maximum input values	DC 30 V, 250 mA (passive)
Maximum output current	22.5 mA (active)
Open-circuit voltage	DC 28.8 V (active)
Output frequency	Adjustable: end value frequency 2 to 10 000 Hz (f_{max} = 12 500 Hz)
Damping	Configurable: 0 to 999.9 s
Pulse/pause ratio	1:1

Assignable measured variables	▪ Mass flow ▪ Volume flow ▪ Corrected volume flow ▪ Density ▪ Reference density ▪ Temperature ▪ Electronics temperature ▪ Oscillation frequency 0 ▪ Oscillation damping 0 ▪ Signal asymmetry ▪ Exciter current 0 The range of options increases if the measuring device has one or more application packages.
Switch output	
Maximum input values	DC 30 V, 250 mA (passive)
Open-circuit voltage	DC 28.8 V (active)
Switching behavior	Binary, conductive or non-conductive
Switching delay	Configurable: 0 to 100 s
Number of switching cycles	Unlimited

Assignable functions	▪ Off
	▪ On
	▪ Diagnostic behavior
	▪ Limit value
	  ▪ Mass flow
	  ▪ Volume flow
	  ▪ Corrected volume flow
	  ▪ Density
	  ▪ Reference density
	  ▪ Temperature
	  ▪ Totalizer 1-3
	▪ Flow direction monitoring
	▪ Status
	  ▪ Partially filled pipe detection
	  ▪ Low flow cut off
	The range of options increases if the measuring device has one or more application packages.

Double pulse output

Function	Double pulse
Version	Open collector Can be set to: ▪ Active ▪ Passive ▪ Passive NAMUR
Maximum input values	DC 30 V, 250 mA (passive)
Open-circuit voltage	DC 28.8 V (active)
Voltage drop	For 22.5 mA: ≤ DC 2 V
Output frequency	Configurable: 0 to 1000 Hz
Damping	Configurable: 0 to 999 s

Pulse/pause ratio	1:1
Assignable measured variables	▪ Mass flow ▪ Volume flow ▪ Corrected volume flow ▪ Density ▪ Reference density ▪ Temperature The range of options increases if the measuring device has one or more application packages.

Relay output

Function	Switch output
Version	Relay output, galvanically isolated
Switching behavior	Can be set to: ▪ NO (normally open), factory setting ▪ NC (normally closed)
Maximum switching capacity (passive)	▪ DC 30 V, 0.1 A ▪ AC 30 V, 0.5 A

Assignable functions	▪ Off
	▪ On
	▪ Diagnostic behavior
	▪ Limit value
	  ▪ Mass flow
	  ▪ Volume flow
	  ▪ Corrected volume flow
	  ▪ Density
	  ▪ Reference density
	  ▪ Temperature
	  ▪ Totalizer 1-3
	▪ Flow direction monitoring
	▪ Status
	  ▪ Partially filled pipe detection
	  ▪ Low flow cut off
	The range of options increases if the measuring device has one or more application packages.

User-configurable input/output

One specific input or output is assigned to a user-configurable input/output (configurable I/O) during device commissioning.

The following inputs and outputs are available for assignment:
- Choice of current output: 4 to 20 mA (active), 0/4 to 20 mA (passive)
- Pulse/frequency/switch output
- Choice of current input: 4 to 20 mA (active), 0/4 to 20 mA (passive)
- Status input

Signal on alarm

Depending on the interface, failure information is displayed as follows:

Current output 0/4 to 20 mA

4 to 20 mA

Failure mode	Choose from: ▪ 4 to 20 mA in accordance with NAMUR recommendation NE 43 ▪ 4 to 20 mA in accordance with US ▪ Min. value: 3.59 mA ▪ Max. value: 22.5 mA ▪ Freely definable value between: 3.59 to 22.5 mA ▪ Actual value ▪ Last valid value

0 to 20 mA

Failure mode	Choose from: ▪ Maximum alarm: 22 mA ▪ Freely definable value between: 0 to 20.5 mA

Pulse/frequency/switch output

Pulse output	
Failure mode	Choose from: ▪ Actual value ▪ No pulses
Frequency output	
Failure mode	Choose from: ▪ Actual value ▪ 0 Hz ▪ Defined value (f_{max} 2 to 12 500 Hz)
Switch output	
Failure mode	Choose from: ▪ Current status ▪ Open ▪ Closed

Relay output

Failure mode	Choose from: ▪ Current status ▪ Open ▪ Closed

Local display

Plain text display	With information on cause and remedial measures
Backlight	Red backlighting indicates a device error.

Status signal as per NAMUR recommendation NE 107

Interface/protocol

- Via digital communication:
  HART protocol
- Via service interface
  - CDI-RJ45 service interface
  - WLAN interface

Plain text display	With information on cause and remedial measures

Web browser

Plain text display	With information on cause and remedial measures

Light emitting diodes (LED)

Status information	Status indicated by various light emitting diodes The following information is displayed depending on the device version: ▪ Supply voltage active ▪ Data transmission active ▪ Device alarm/error has occurred Diagnostic information via light emitting diodes → 137

Low flow cut off

The switch points for low flow cut off are user-selectable.

Galvanic isolation

The outputs are galvanically isolated from one another and from earth (PE).

Protocol-specific data

Manufacturer ID	0x11
Device type ID	0x3B
HART protocol revision	7
Device description files (DTM, DD)	Information and files under: www.endress.com
HART load	Min. 250 Ω
System integration	Information on system integration → 71. ▪ Measured variables via HART protocol ▪ Burst Mode functionality

16.5 Power supply

Terminal assignment

→ 34

Supply voltage

Order code for "Power supply"	Terminal voltage		Frequency range
Option **D**	DC 24 V	±20%	–
Option **E**	AC 100 to 240 V	−15 to +10%	50/60 Hz
Option **I**	DC 24 V	±20%	–
	AC 100 to 240 V	−15 to +10%	50/60 Hz

Power consumption	**Transmitter** Max. 10 W (active power) **switch-on current**: Max. 36 A (<5 ms) as per NAMUR Recommendation NE 21
Current consumption	**Transmitter** ▪ Max. 400 mA (24 V) ▪ Max. 200 mA (110 V, 50/60 Hz; 230 V, 50/60 Hz)
Power supply failure	▪ Totalizers stop at the last value measured. ▪ Depending on the device version, the configuration is retained in the device memoryor in the pluggable data memory (HistoROM DAT). ▪ Error messages (incl. total operated hours) are stored.
Electrical connection	→ 📄 34
Potential equalization	→ 📄 37
Terminals	Spring-loaded terminals: Suitable for strands and strands with ferrules. Conductor cross-section 0.2 to 2.5 mm^2 (24 to 12 AWG).

Cable entries	▪ Cable gland: M20 × 1.5 with cable ⌀ 6 to 12 mm (0.24 to 0.47 in)
	▪ Thread for cable entry:
	  ▪ NPT ½"
	  ▪ G ½"
	  ▪ M20

Cable specification	→ 📄 31

16.6 Performance characteristics

Reference operating conditions	▪ Error limits based on ISO 11631 ▪ Water with +15 to +45 °C (+59 to +113 °F) at2 to 6 bar (29 to 87 psi) ▪ Specifications as per calibration protocol ▪ Accuracy based on accredited calibration rigs that are traced to ISO 17025. ℹ To obtain measured errors, use the *Applicator* sizing tool → 📄 162
Maximum measured error	o.r. = of reading; 1 g/cm^3 = 1 kg/l; T = medium temperature **Base accuracy** ℹ Design fundamentals → 📄 177 *Mass flow and volume flow (liquids)* ±0.10 % o.r.

Mass flow (gases)

±0.35 % o.r.

Density (liquids)

Under reference conditions [g/cm³]	Standard density calibration [1] [g/cm³]	Wide-range Density specification [2] [3] [g/cm³]
±0.0005	±0.02	±0.002

1) Valid over the entire temperature and density range
2) Valid range for special density calibration: 0 to 2 g/cm³, +5 to +80 °C (+41 to +176 °F)
3) Order code for "Application package", option EE "Special density"

Temperature

±0.5 °C ± 0.005 · T °C (±0.9 °F ± 0.003 · (T − 32) °F)

Zero point stability

Standard version: order code for "Measuring tube mat., wetted surface", option BB, BF, HA, SA

DN		Zero point stability	
[mm]	[in]	[kg/h]	[lb/min]
1	1/24	0.0005	0.000018
2	1/12	0.0025	0.00009
4	1/8	0.0100	0.00036

High-pressure version: order code for "Measuring tube mat., wetted surface", option HB

DN		Zero point stability	
[mm]	[in]	[kg/h]	[lb/min]
1	1/24	0.0008	0.0000288
2	1/12	0.0040	0.000144
4	1/8	0.0160	0.000576

Flow values

Flow values as turndown parameter depending on nominal diameter.

SI units

DN	1:1	1:10	1:20	1:50	1:100	1:500
[mm]	[kg/h]	[kg/h]	[kg/h]	[kg/h]	[kg/h]	[kg/h]
1	20	2	1	0.4	0.2	0.04
2	100	10	5	2	1	0.2
4	450	45	22.5	9	4.5	0.9

US units

DN	1:1	1:10	1:20	1:50	1:100	1:500
[inch]	[lb/min]	[lb/min]	[lb/min]	[lb/min]	[lb/min]	[lb/min]
1/24	0.735	0.074	0.037	0.015	0.007	0.001
1/12	3.675	0.368	0.184	0.074	0.037	0.007
1/8	16.54	1.654	0.827	0.331	0.165	0.033

Accuracy of outputs

The outputs have the following base accuracy specifications.

Current output

Accuracy	±5 µA

Pulse/frequency output

o.r. = of reading

Accuracy	Max. ±50 ppm o.r. (over the entire ambient temperature range)

Repeatability

o.r. = of reading; 1 g/cm^3 = 1 kg/l; T = medium temperature

Base repeatability

Design fundamentals → 177

Mass flow and volume flow (liquids)

±0.05 % o.r.

Mass flow (gases)

±0.15 % o.r.

Density (liquids)

±0.00025 g/cm^3

Temperature

±0.25 °C ± 0.0025 · T °C (±0.45 °F ± 0.0015 · (T−32) °F)

Response time

The response time depends on the configuration (damping).

Influence of ambient temperature

Current output

Temperature coefficient	Max. 1 µA/°C

Pulse/frequency output

Temperature coefficient	No additional effect. Included in accuracy.

Influence of medium temperature

Mass flow and volume flow

o.f.s. = of full scale value

When there is a difference between the temperature for zero point adjustment and the process temperature, the additional measured error of the sensor is typically ±0.0002 % o.f.s./°C (±0.0001 % o. f.s./°F).

The effect is reduced if zero point adjustment is performed at process temperature.

Density
When there is a difference between the density calibration temperature and the process temperature, the typical measured error of the sensor is
±0.00005 g/cm³ /°C (±0.000025 g/cm³ /°F). Field density calibration is possible.

Wide-range density specification (special density calibration)
If the process temperature is outside the valid range (→ 174) the measured error is ±0.00005 g/cm³ /°C (±0.000025 g/cm³ /°F)

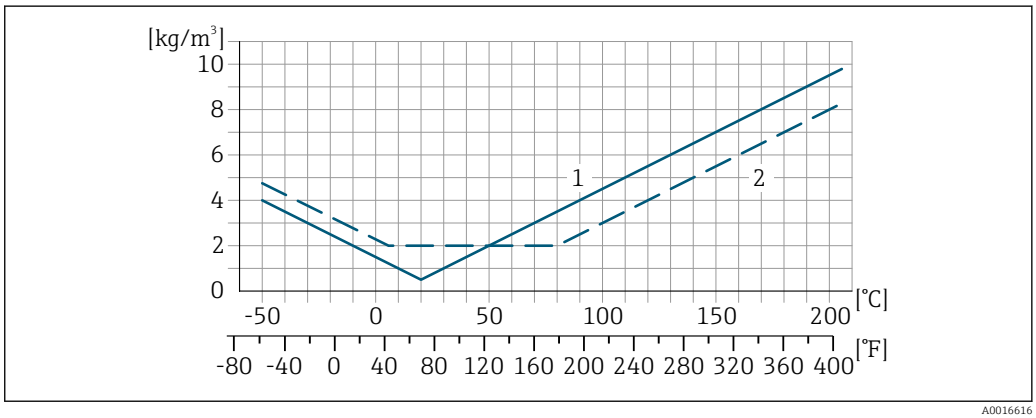

1 Field density calibration, for example at +20 °C (+68 °F)
2 Special density calibration

Influence of medium pressure

A difference between the calibration pressure and process pressure does not affect accuracy.

Design fundamentals

o.r. = of reading, o.f.s. = of full scale value

BaseAccu = base accuracy in % o.r., BaseRepeat = base repeatability in % o.r.

MeasValue = measured value; ZeroPoint = zero point stability

Calculation of the maximum measured error as a function of the flow rate

Flow rate	Maximum measured error in % o.r.
$\geq \frac{\text{ZeroPoint}}{\text{BaseAccu}} \cdot 100$ A0021332	± BaseAccu A0021339
$< \frac{\text{ZeroPoint}}{\text{BaseAccu}} \cdot 100$ A0021333	$\pm \frac{\text{ZeroPoint}}{\text{MeasValue}} \cdot 100$ A0021334

Calculation of the maximum repeatability as a function of the flow rate

Flow rate	Maximum repeatability in % o.r.
$\geq \frac{½ \cdot \text{ZeroPoint}}{\text{BaseRepeat}} \cdot 100$ A0021335	$\pm$ BaseRepeat A0021340
$< \frac{½ \cdot \text{ZeroPoint}}{\text{BaseRepeat}} \cdot 100$ A0021336	$\pm ½ \cdot \frac{\text{ZeroPoint}}{\text{MeasValue}} \cdot 100$ A0021337

Example for maximum measured error

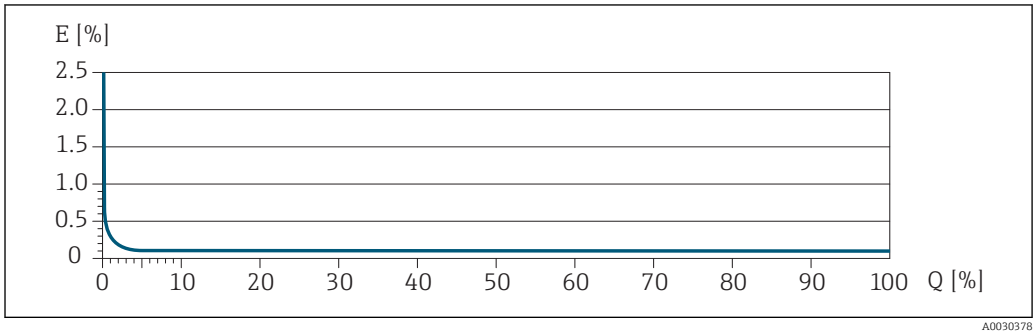

E Maximum measured error in % o.r. (example)
Q Flow rate in % of maximum full scale value

16.7 Installation

Installation conditions

→ 📄 22

16.8 Environment

Ambient temperature range

→ 📄 24→ 📄 24

Temperature tables

Observe the interdependencies between the permitted ambient and fluid temperatures when operating the device in hazardous areas.

For detailed information on the temperature tables, see the separate document entitled "Safety Instructions" (XA) for the device.

Storage temperature

−50 to +80 °C (−58 to +176 °F)

Climate class

DIN EN 60068-2-38 (test Z/AD)

Degree of protection

Measuring device
- As standard: IP66/67, type 4X enclosure
- When housing is open: IP20, type 1 enclosure
- Display module: IP20, type 1 enclosure
- With the order code for "Sensor options", option CM: IP69 can also be ordered

External WLAN antenna
IP67

Vibration- and shock-resistance	**Vibration sinusoidal, in accordance with IEC 60068-2-6** ▪ 2 to 8.4 Hz, 3.5 mm peak ▪ 8.4 to 2 000 Hz, 1 g peak **Vibration broad-band random, according to IEC 60068-2-64** ▪ 10 to 200 Hz, 0.003 g^2/Hz ▪ 200 to 2 000 Hz, 0.001 g^2/Hz ▪ Total: 1.54 g rms **Shock half-sine, according to IEC 60068-2-27** 6 ms 30 g **Rough handling shocks, according to IEC 60068-2-31**
Mechanical load	Never use the transmitter housing as a ladder or climbing aid.
Electromagnetic compatibility (EMC)	As per IEC/EN 61326 and NAMUR Recommendation 21 (NE 21) Details are provided in the Declaration of Conformity.

16.9 Process

Medium temperature range	−50 to +205 °C (−58 to +401 °F) **Dependency of ambient temperature on medium temperature**

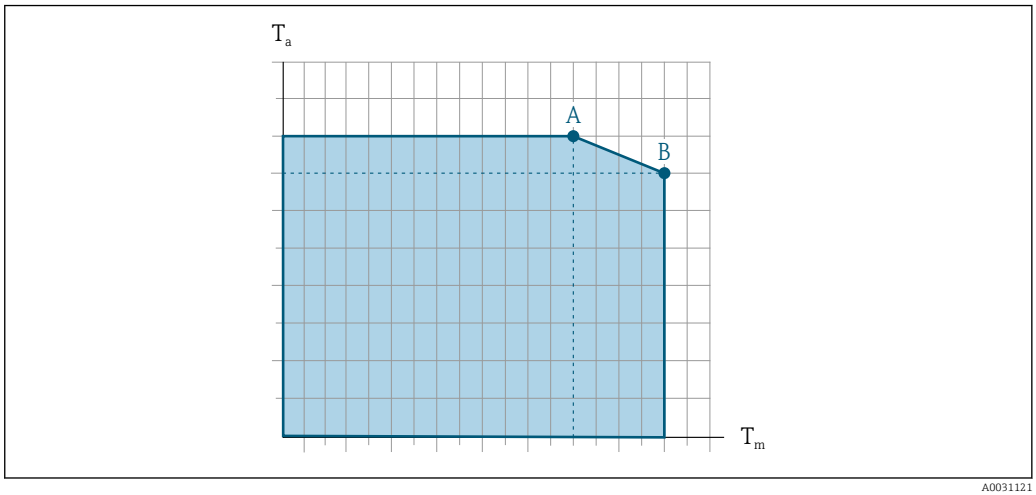

35 Exemplary representation, values in the table below.

T_a Ambient temperature range
T_m Medium temperature
A Maximum permitted medium temperature T_m at $T_{a\,max}$ = 60 °C (140 °F); higher medium temperatures T_m require a reduced ambient temperature T_a
B Maximum permitted ambient temperature T_a for the maximum specified medium temperature T_m of the sensor

Values for devices used in the hazardous area:
Separate Ex documentation (XA) for the device → 194.

Not insulated				Insulated			
A		B		A		B	
T_a	T_m	T_a	T_m	T_a	T_m	T_a	T_m
60 °C (140 °F)	205 °C (401 °F)	–	–	60 °C (140 °F)	120 °C (248 °F)	55 °C (131 °F)	205 °C (401 °F)

Density

0 to 5 000 kg/m³ (0 to 312 lb/cf)

Pressure-temperature ratings

An overview of the pressure-temperature ratings for the process connections is provided in the "Technical Information" document

Sensor housing

The sensor housing is filled with dry nitrogen gas and protects the electronics and mechanics inside.

If a measuring tube fails (e.g. due to process characteristics like corrosive or abrasive fluids), the fluid will initially be contained by the sensor housing.

In the event of a tube failure, the pressure level inside the sensor housing will rise according to the operating process pressure. If the user judges that the sensor housing burst pressure does not provide an adequate safety margin, the device can be fitted with a rupture disk. This prevents excessively high pressure from forming inside the sensor housing. Therefore, the use of a rupture disk is strongly recommended in applications involving high gas pressures, and particularly in applications in which the process pressure is greater than 2/3 of the sensor housing burst pressure.

High-pressure devices are always fitted with a rupture disk: order code for "Measuring tube mat., wetted surface", option HB

Burst pressure of the sensor housing

If the device is fitted with a rupture disk (order code for "Sensor option", option CA "Rupture disk"), the rupture disk trigger pressure is decisive .

The sensor housing burst pressure refers to a typical internal pressure which is reached prior to mechanical failure of the sensor housing and which was determined during type testing. The corresponding type test declaration can be ordered with the device (order code for "Additional approval", option LN "Sensor housing burst pressure, type test").

DN		Sensor housing burst pressure	
[mm]	[in]	[bar]	[psi]
1	1/24	220	3 190
2	1/12	140	2 030
4	1/8	105	1 520

For information on the dimensions: see the "Mechanical construction" section of the "Technical Information" document

Rupture disk

To increase the level of safety, a device version with a rupture disk with a trigger pressure of 10 to 15 bar (145 to 217.5 psi)can be used (order code for "Sensor option", option CA "rupture disk").

Drain connection for rupture disk

To allow any escaping medium to drain in a controlled manner in the event of an error, an optional drain connection can be ordered in addition to the rupture disk.

The function of the rupture disk is not compromised in any way.

Flow limit

Select the nominal diameter by optimizing between the required flow range and permissible pressure loss.

For an overview of the full scale values for the measuring range, see the "Measuring range" section → 164

- The minimum recommended full scale value is approx. 1/20 of the maximum full scale value
- In most applications, 20 to 50 % of the maximum full scale value can be considered ideal
- A low full scale value must be selected for abrasive media (such as liquids with entrained solids): flow velocity < 1 m/s (< 3 ft/s).
- For gas measurement the following rules apply:
  - The flow velocity in the measuring tubes should not exceed half the sound velocity (0.5 Mach).
  - The maximum mass flow depends on the density of the gas: formula → 164

To calculate the flow limit, use the *Applicator* sizing tool → 162

Pressure loss

To calculate the pressure loss, use the *Applicator* sizing tool → 162

System pressure

→ 24

16.10 Mechanical construction

Design, dimensions

For the dimensions and installation lengths of the device, see the "Technical Information" document, "Mechanical construction" section.

Weight

All values (weight exclusive of packaging material) refer to devices with VCO couplings. Weight specifications including transmitter as per order code for "Housing", option A "Aluminum, coated".

Different values due to different transmitter versions:
- Transmitter version for the hazardous area
  (Order code for "Housing", option A "Aluminum, coated"; Ex d): +2 kg (+4.4 lbs)
- Transmitter version for hygienic area
  (Order code for "Housing", option B "Stainless, hygienic"): +0.2 kg (+0.44 lbs)

Weight in SI units

DN [mm]	Weight [kg]
1	5.35
2	6.9
4	8.75

Weight in US units

DN [in]	Weight [lbs]
1/24	12
1/12	15
1/8	19

Materials

Transmitter housing

Order code for "Housing":
- Option **A** "Aluminum, coated": aluminum, AlSi10Mg, coated
- Option **B** "Stainless, hygienic": stainless steel, 1.4404 (316L)

Window material

Order code for "Housing":
- Option **A** "Aluminum, coated": glass
- Option **B** "Stainless, hygienic": polycarbonate

Seals

Order code for "Housing":
Option **B** "Stainless, hygienic": EPDM and silicone

Cable entries/cable glands

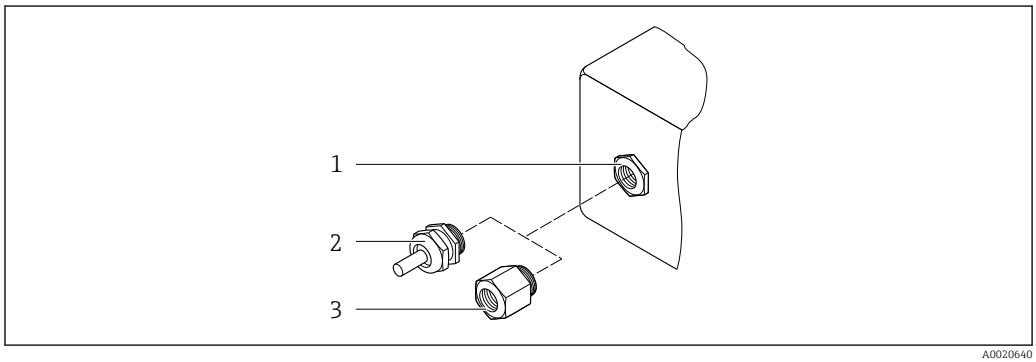

36 Possible cable entries/cable glands

1 Female thread M20 × 1.5
2 Cable gland M20 × 1.5
3 Adapter for cable entry with female thread G ½" or NPT ½"

Order code for "Housing", option A "Aluminum, coated"

The various cable entries are suitable for hazardous and non-hazardous areas.

Cable entry/cable gland	Material
Coupling M20 × 1.5	Non-Ex: plastic
	Z2, D2, Ex d/de: brass with plastic
Adapter for cable entry with female thread G ½"	Nickel-plated brass
Adapter for cable entry with female thread NPT ½"	

Order code for "Housing", option B "Stainless, hygienic"

The various cable entries are suitable for hazardous and non-hazardous areas.

Cable entry/cable gland	Material
Cable gland M20 × 1.5	Plastic
Adapter for cable entry with female thread G ½"	Nickel-plated brass
Adapter for cable entry with female thread NPT ½"	

Sensor housing

- Acid and alkali-resistant outer surface
- Stainless steel, 1.4404 (316L)

Measuring tubes

Order code for "Measuring tube mat., wetted surface", option BB, BF, SA

Stainless steel, 1.4435 (316/316L)

Order code for "Measuring tube mat., wetted surface", option HA, HB, HC, HD

Alloy C22, 2.4602 (UNS N06022)

Process connections

Order code for "Measuring tube mat., wetted surface", option SA

VCO coupling	Stainless steel, 1.4404 (316/316L)
G¼", G½" female thread	Stainless steel, 1.4404 (316/316L)
NPT¼", NPT½" female thread	Stainless steel, 1.4404 (316/316L)
Tri-Clamp½"	Stainless steel, 1.4435 (316L)
Fixed flange EN 1092-1, ASME B16.5, JIS B2220	Stainless steel, 1.4404 (316/316L)

Order code for "Measuring tube mat., wetted surface", option BB, BF

VCO coupling	Stainless steel, 1.4404 (316/316L)
Tri-Clamp½"	Stainless steel, 1.4435 (316L)

Order code for "Measuring tube mat., wetted surface", option HC, HD

VCO coupling	Alloy C22, 2.4602 (UNS N06022)
Tri-Clamp½"	Alloy C22, 2.4602 (UNS N06022)

Order code for "Measuring tube mat., wetted surface", option HA

VCO coupling	Alloy C22, 2.4602 (UNS N06022)
G¼", G½" female thread	Alloy C22, 2.4602 (UNS N06022)
NPT¼", NPT½" female thread	Alloy C22, 2.4602 (UNS N06022)

Fixed flange EN 1092-1, ASME B16.5, JIS B2220	Alloy C22, 2.4602 (UNS N06022)
Lap joint flange EN 1092-1, ASME B16.5, JIS B2220	Stainless steel, 1.4301 (F304), wetted parts Alloy C22, 2.4602 (UNS N06022)

Order code for "Measuring tube mat., wetted surface", option HB (high-pressure option)

VCO coupling	Alloy C22, 2.4602 (UNS N06022)
G¼", G½" female thread	Alloy C22, 2.4602 (UNS N06022)
NPT¼", NPT½" female thread	Alloy C22, 2.4602 (UNS N06022)
Fixed flange EN 1092-1, ASME B16.5, JIS B2220	Stainless steel, 1.4404 (316/316L); Alloy C22, 2.4602 (UNS N06022)

Available process connections→ 185

Seals

Welded process connections without internal seals

Accessories

Sensor holder

Stainless steel, 1.4404 (316L)

Heating jacket

- Heating jacket housing: stainless steel, 1.4571 (316Ti)
- NPT adapter ½": stainless steel, 1.4404 (316)
- G½" adapter: stainless steel, 1.4404

Protective cover

Stainless steel, 1.4404 (316L)

External WLAN antenna

- Antenna: ASA plastic (acrylic ester-styrene-acrylonitrile) and nickel-plated brass
- Adapter: Stainless steel and nickel-plated brass
- Cable: Polyethylene
- Plug: Nickel-plated brass
- Angle bracket: Stainless steel

Process connections	▪ Fixed flange connections: ▪ EN 1092-1 (DIN 2501) flange ▪ EN 1092-1 (DIN 2512N) flange ▪ ASME B16.5 flange ▪ JIS B2220 flange ▪ Clamp connections: Tri-Clamp (OD tubes), DIN 11866 series C ▪ VCO connections: 4-VCO-4 ▪ Female thread: ▪ Cylindrical female thread BSPP (G) in accordance with ISO 228-1 ▪ NPT Process connection materials → 📄 183
Surface roughness	All data relate to parts in contact with fluid. The following surface roughness quality can be ordered. ▪ Not polished ▪ Ra_{max} = 0.76 µm (30 µin) mechanically polished ▪ Ra_{max} = 0.38 µm (15 µin) mechanically polished

16.11 Human interface

Languages	Can be operated in the following languages: ▪ Via local operation English, German, French, Spanish, Italian, Dutch, Portuguese, Polish, Russian, Turkish, Chinese, Japanese, Korean, Bahasa (Indonesian), Vietnamese, Czech, Swedish ▪ Via Web browser English, German, French, Spanish, Italian, Dutch, Portuguese, Polish, Russian, Turkish, Chinese, Japanese, Korean, Bahasa (Indonesian), Vietnamese, Czech, Swedish ▪ Via "FieldCare", "DeviceCare" operating tool: English, German, French, Spanish, Italian, Chinese, Japanese
Local operation	**Via display module** Equipment: ▪ Order code for "Display; operation", option F "4-line, illuminated, graphic display; touch control" ▪ Order code for "Display; operation", option G "4-line, illuminated, graphic display; touch control + WLAN" Information about WLAN interface → 📄 65

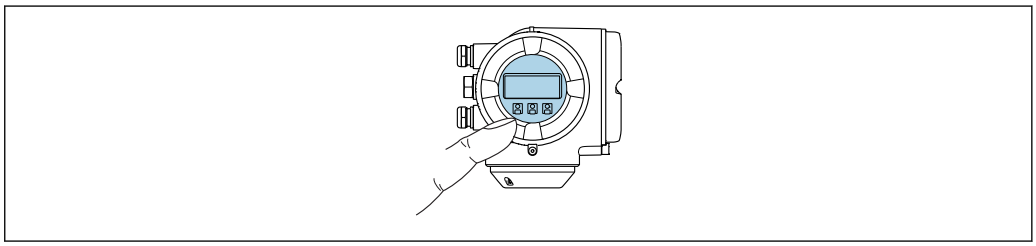

A0026785

37 Operation with touch control

Display elements

- 4-line, illuminated, graphic display
- White background lighting; switches to red in event of device errors
- Format for displaying measured variables and status variables can be individually configured
- Permitted ambient temperature for the display: −20 to +60 °C (−4 to +140 °F)
  The readability of the display may be impaired at temperatures outside the temperature range.

Operating elements

- External operation via touch control (3 optical keys) without opening the housing: ⊞, ⊟, E
- Operating elements also accessible in the various zones of the hazardous area

Via remote display and operating module DKX001

The remote display and operating module DKX001 is available as an optional extra → 160.

- The remote display and operating module DKX001 is only available for the following housing version: order code for "Housing": option A "Aluminum, coated"
- The measuring device is always supplied with a dummy cover when the remote display and operating module DKX001 is ordered directly with the measuring device. Display or operation at the transmitter is not possible in this case.
- If ordered subsequently, the remote display and operating module DKX001 may not be connected at the same time as the existing measuring device display module. Only one display or operation unit may be connected to the transmitter at any one time.

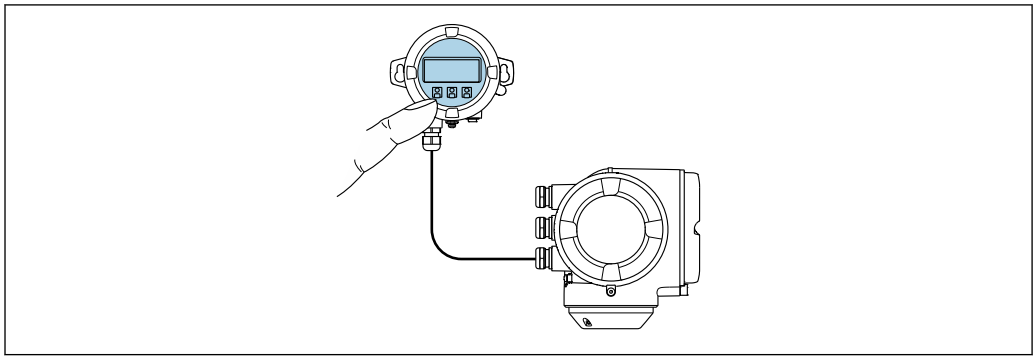

A0026786

38 Operation via remote display and operating module DKX001

Display and operating elements

The display and operating elements correspond to those of the display module → 185.

Housing material

The housing material of the display and operating module DKX001 depends on the choice of transmitter housing material.

Transmitter housing		Remote display and operating module
Order code for "Housing"	**Material**	**Material**
Option **A** "Aluminum, coated"	AlSi10Mg, coated	AlSi10Mg, coated

Cable entry

Corresponds to the choice of transmitter housing, order code for "Electrical connection".

Connecting cable

→ 📄 32

Dimensions

Information on the dimensions:
"Mechanical construction" section of the "Technical Information" document.

Remote operation

→ 📄 63

Service interface

→ 📄 64

Supported operating tools

Different operating tools can be used for local or remote access to the measuring device. Depending on the operating tool used, access is possible with different operating units and via a variety of interfaces.

Supported operating tools	Operating unit	Interface	Additional information
Web browser	Notebook, PC or tablet with Web browser	▪ CDI-RJ45 service interface ▪ WLAN interface	Special Documentation for device → 📄 194
DeviceCare SFE100	Notebook, PC or tablet with Microsoft Windows system	▪ CDI-RJ45 service interface ▪ WLAN interface ▪ Fieldbus protocol	→ 📄 162
FieldCare SFE500	Notebook, PC or tablet with Microsoft Windows system	▪ CDI-RJ45 service interface ▪ WLAN interface ▪ Fieldbus protocol	→ 📄 162
Device Xpert	Field Xpert SFX 100/350/370	HART fieldbus protocol	Operating Instructions BA01202S Device description files: Use update function of handheld terminal

Other operating tools based on FDT technology with a device driver such as DTM/iDTM or DD/EDD can be used for device operation. These operating tools are available from the individual manufacturers. Integration into the following operating tools, among others, is supported:

- FactoryTalk AssetCentre (FTAC) by Rockwell Automation → www.rockwellautomation.com
- Process Device Manager (PDM) by Siemens → www.siemens.com
- Asset Management Solutions (AMS) by Emerson → www.emersonprocess.com
- FieldCommunicator 375/475 by Emerson → www.emersonprocess.com
- Field Device Manager (FDM) by Honeywell → www.honeywellprocess.com
- FieldMate by Yokogawa → www.yokogawa.com
- PACTWare → www.pactware.com

The associated device description files are available at: www.endress.com → Downloads

Web server

Thanks to the integrated Web server, the device can be operated and configured via a Web browser and via a service interface (CDI-RJ45) or via a WLAN interface. The structure of the operating menu is the same as for the local display. In addition to the measured values, status information on the device is also displayed and allows the user to monitor the status

of the device. Furthermore the device data can be managed and the network parameters can be configured.

A device that has a WLAN interface (can be ordered as an option) is required for the WLAN connection: order code for "Display; operation", option G "4-line, illuminated; touch control + WLAN". The device acts as an Access Point and enables communication by computer or a mobile handheld terminal.

Supported functions
Data exchange between the operating unit (such as a notebook for example) and the measuring device:
- Upload the configuration from the measuring device (XML format, configuration backup)
- Save the configuration to the measuring device (XML format, restore configuration)
- Export event list (.csv file)
- Export parameter settings (.csv file or PDF file, document the measuring point configuration)
- Export the Heartbeat verification log (PDF file, only available with the "Heartbeat Verification" application package)
- Flash firmware version for device firmware upgrade, for instance
- Download driver for system integration
- Visualize up to 1000 saved measured values (only available with the **Extended HistoROM** application package → 192)

Web server special documentation → 194

HistoROM data management

The measuring device features HistoROM data management. HistoROM data management comprises both the storage and import/export of key device and process data, making operation and servicing far more reliable, secure and efficient.

When the device is delivered, the factory settings of the configuration data are stored as a backup in the device memory. This memory can be overwritten with an updated data record, for example after commissioning.

Additional information on the data storage concept

There are different types of data storage units in which device data are stored and used by the device:

	Device memory	T-DAT	S-DAT
Available data	▪ Event logbook such as diagnostic events for example ▪ Parameter data record backup ▪ Device firmware package	▪ Measured value logging ("Extended HistoROM" order option) ▪ Current parameter data record (used by firmware at run time) ▪ Peakhold indicator (min/max values) ▪ Totalizer values	▪ Sensor data: nominal diameter etc. ▪ Serial number ▪ Calibration data ▪ Device configuration (e.g. SW options, fixed I/O or multi I/O)
Storage location	Fixed on the user interface board in the connection compartment	Attachable to the user interface board in the connection compartment	In the sensor plug in the transmitter neck part

Data backup

Automatic

- The most important device data (sensor and transmitter) are automatically saved in the DAT modules
- If the transmitter or measuring device is replaced: once the T-DAT containing the previous device data has been exchanged, the new measuring device is ready for operation again immediately without any errors
- If the sensor is replaced: once the sensor has been replaced, new sensor data are transferred from the S-DAT in the measuring device and the measuring device is ready for operation again immediately without any errors
- If exchanging the electronics module (e.g. I/O electronics module): Once the electronics module has been replaced, the software of the module is compared against the current device firmware. The module software is upgraded or downgraded where necessary. The electronics module is available for use immediately afterwards and no compatibility problems occur.

Manual

Additional parameter data record (complete parameter settings) in the integrated device memory HistoROM backup for:

- Data backup function
  Backup and subsequent restoration of a device configuration in the device memory HistoROM backup
- Data comparison function
  Comparison of the current device configuration with the device configuration saved in the device memory HistoROM backup

Data transfer

Manual

Transfer of a device configuration to another device using the export function of the specific operating tool, e.g. with FieldCare, DeviceCare or Web server: to duplicate the configuration or to store in an archive (e.g. for backup purposes)

Event list

Automatic

- Chronological display of up to 20 event messages in the events list
- If the **Extended HistoROM** application package (order option) is enabled: up to 100 event messages are displayed in the events list along with a time stamp, plain text description and remedial measures
- The events list can be exported and displayed via a variety of interfaces and operating tools e.g. DeviceCare, FieldCare or Web server

Data logging

Manual

If the **Extended HistoROM** application package (order option) is enabled:

- Record up to 1 000 measured values via 1 to 4 channels
- User configurable recording interval
- Record up to 250 measured values via each of the 4 memory channels
- Export the measured value log via a variety of interfaces and operating tools e.g. FieldCare, DeviceCare or web server

16.12 Certificates and approvals

Currently available certificates and approvals can be called up via the product configurator.

CE mark	The device meets the legal requirements of the applicable EU Directives. These are listed in the corresponding EU Declaration of Conformity along with the standards applied. Endress+Hauser confirms successful testing of the device by affixing to it the CE mark.
RCM-tick symbol	The measuring system meets the EMC requirements of the "Australian Communications and Media Authority (ACMA)".
Ex approval	The devices are certified for use in hazardous areas and the relevant safety instructions are provided in the separate "Safety Instructions" (XA) document. Reference is made to this document on the nameplate.

Sanitary compatibility	▪ 3-A approval
	  ▪ Only measuring devices with the order code for "Additional approval", option LP "3A" have 3-A approval.
	  ▪ The 3-A approval refers to the measuring device.
	  ▪ When installing the measuring device, ensure that no liquid can accumulate on the outside of the measuring device.
	  Remote transmitters must be installed in accordance with the 3-A Standard.
	  ▪ Accessories (e.g. heating jacket, weather protection cover, wall holder unit) must be installed in accordance with the 3-A Standard.
	  Each accessory can be cleaned. Disassembly may be necessary under certain circumstances.
	▪ FDA
	▪ Food Contact Materials Regulation (EC) 1935/2004

Pharmaceutical compatibility	▪ FDA 21 CFR 177 ▪ USP <87> ▪ USP <88> Class VI 121 °C ▪ TSE/BSE Certificate of Suitability ▪ cGMP ℹ Devices with order code for "Test, certificate", option JG "Compliance with requirements derived from cGMP, declaration" are in accordance with cGMP requirements relating to the surfaces of wetted parts, design, FDA 21 CFR material conformity, USP Class VI tests and TSE/BSE-compliance. A manufacturer's declaration specific to the serial number is supplied with the device.
Functional safety	The measuring device can be used for flow monitoring systems (min., max., range) up to SIL 2 (single-channel architecture; order code for "Additional approval", option LA) and SIL 3 (multichannel architecture with homogeneous redundancy) and is independently evaluated and certified by the TÜV in accordance with IEC 61508. The following types of monitoring in safety equipment are possible: ▪ Mass flow ▪ Volume flow ▪ Density ℹ Functional Safety Manual with information on the SIL device → 📄 194

HART certification

HART interface

The measuring device is certified and registered by the FieldComm Group. The measuring system meets all the requirements of the following specifications:
- Certified according to HART 7
- The device can also be operated with certified devices of other manufacturers (interoperability)

Radio approval

The measuring device has radio approval.

For detailed information regarding radio approval, see Special Documentation → 194

Additional certification

CRN approval

Some device versions have CRN approval. A CRN-approved process connection with a CSA approval must be ordered for a CRN-approved device.

Tests and certificates

- EN10204-3.1 material certificate, parts and sensor housing in contact with medium
- Pressure testing, internal procedure, inspection certificate
- PMI test (XRF), internal procedure, wetted parts, test report
- Compliance with requirements derived from cGMP, Declaration
- NACE MR0175 / ISO 15156
- NACE MR0103 / ISO 17945

Testing of welded connections

Option	Test standard				Process connection
	ISO 10675-1 AL1	ASME B31.3 NFS	ASME VIII Div.1	NORSOK M-601	
KE	x				RT
KI		x			RT
KN			x		RT
KS				x	RT
K5	x				DR
K6		x			DR
K7			x		DR
K8				x	DR
RT = Radiographic testing, DR = Digital radiography All options with test report					

Other standards and guidelines

- EN 60529
  Degrees of protection provided by enclosures (IP code)
- IEC/EN 60068-2-6
  Environmental influences: Test procedure - Test Fc: vibrate (sinusoidal).
- IEC/EN 60068-2-31
  Environmental influences: Test procedure - Test Ec: shocks due to rough handling, primarily for devices.
- EN 61010-1
  Safety requirements for electrical equipment for measurement, control and laboratory use - general requirements
- IEC/EN 61326
  Emission in accordance with Class A requirements. Electromagnetic compatibility (EMC requirements).

- NAMUR NE 21
  Electromagnetic compatibility (EMC) of industrial process and laboratory control equipment
- NAMUR NE 32
  Data retention in the event of a power failure in field and control instruments with microprocessors
- NAMUR NE 43
  Standardization of the signal level for the breakdown information of digital transmitters with analog output signal.
- NAMUR NE 53
  Software of field devices and signal-processing devices with digital electronics
- NAMUR NE 105
  Specifications for integrating fieldbus devices in engineering tools for field devices
- NAMUR NE 107
  Self-monitoring and diagnosis of field devices
- NAMUR NE 131
  Requirements for field devices for standard applications
- NAMUR NE 132
  Coriolis mass meter
- ETSI EN 300 328
  Guidelines for 2.4 GHz radio components.
- EN 301489
  Electromagnetic compatibility and radio spectrum matters (ERM).

16.13 Application packages

Many different application packages are available to enhance the functionality of the device. Such packages might be needed to address safety aspects or specific application requirements.

The application packages can be ordered with the device or subsequently from Endress+Hauser. Detailed information on the order code in question is available from your local Endress+Hauser sales center or on the product page of the Endress+Hauser website: www.endress.com.

Detailed information on the application packages:
Special Documentation for the device → 194

Diagnostics functions

Package	Description
Extended HistoROM	Comprises extended functions concerning the event log and the activation of the measured value memory. Event log: Memory volume is extended from 20 message entries (standard version) to up to 100 entries. Data logging (line recorder): ▪ Memory capacity for up to 1000 measured values is activated. ▪ 250 measured values can be output via each of the 4 memory channels. The recording interval can be defined and configured by the user. ▪ Measured value logs can be accessed via the local display or operating tool e.g. FieldCare, DeviceCare or Web server.

Heartbeat Technology

Package	Description
Heartbeat Verification +Monitoring	**Heartbeat Verification** Meets the requirement for traceable verification to DIN ISO 9001:2008 Chapter 7.6 a) "Control of monitoring and measuring equipment". ▪ Functional testing in the installed state without interrupting the process. ▪ Traceable verification results on request, including a report. ▪ Simple testing process via local operation or other operating interfaces. ▪ Clear measuring point assessment (pass/fail) with high test coverage within the framework of manufacturer specifications. ▪ Extension of calibration intervals according to operator's risk assessment. **Heartbeat Monitoring** Continuously supplies data, which are characteristic of the measuring principle, to an external condition monitoring system for the purpose of preventive maintenance or process analysis. These data enable the operator to: ▪ Draw conclusions - using these data and other information - about the impact process influences (such as corrosion, abrasion, buildup etc.) have on the measuring performance over time. ▪ Schedule servicing in time. ▪ Monitor the process or product quality, e.g. gas pockets.

Concentration

Package	Description
Concentration	**Calculation and outputting of fluid concentrations** The measured density is converted to the concentration of a substance of a binary mixture using the "Concentration" application package: ▪ Choice of predefined fluids (e.g. various sugar solutions, acids, alkalis, salts, ethanol etc.) ▪ Common or user-defined units (°Brix, °Plato, % mass, % volume, mol/l etc.) for standard applications. ▪ Concentration calculation from user-defined tables.

Special density

Package	Description
Special density	Many applications use density as a key measured value for monitoring quality or controlling processes. The device measures the density of the fluid as standard and makes this value available to the control system. The "Special Density" application package offers high-precision density measurement over a wide density and temperature range particularly for applications subject to varying process conditions.

OPC-UA server

Package	Description
OPC-UA-Server	The application package provides the user with an integrated OPC-UA server for comprehensive instrument services for IoT and SCADA applications. Special Documentation for the "OPC-UA-Server" application package → 194.

16.14 Accessories

Overview of accessories available for order → 160

16.15 Supplementary documentation

For an overview of the scope of the associated Technical Documentation, refer to the following:
- *W@M Device Viewer* (www.endress.com/deviceviewer): Enter the serial number from nameplate
- *Endress+Hauser Operations App*: Enter the serial number from the nameplate or scan the 2D matrix code (QR code) on the nameplate

Standard documentation

Brief Operating Instructions

Brief Operating Instructions for the sensor

Measuring device	Documentation code
Proline Promass A	KA01282D

Brief Operating Instructions for transmitter

Measuring device	Documentation code
Proline 300	KA01309D

Technical Information

Measuring device	Documentation code
Promass A 300	TI01374D

Description of Device Parameters

Measuring device	Documentation code
Promass 300	GP01057D

Device-dependent additional documentation

Safety instructions

Safety instructions for electrical equipment for hazardous areas.

Remote display and operating module DKX001

Contents	Documentation code
ATEX/IECEx Ex i	XA01494D
ATEX/IECEx Ex ec	XA01498D
cCSAus IS	XA01499D
cCSAus Ex nA	XA01513D
INMETRO Ex i	XA01500D
INMETRO Ex ec	XA01501D
NEPSI Ex i	XA01502D
NEPSI Ex nA	XA01503D

Special Documentation

Contents	Documentation code
Information on the Pressure Equipment Directive	SD01614D
Functional Safety Manual	SD01727D
Remote display and operating module DKX001	SD01763D
Radio approvals for WLAN interface for A309/A310 display module	SD01793D
Web server	SD01662D
OPC-UA Server	SD02039D
Heartbeat Technology	SD01642D
Concentration measurement	SD01644D

Installation Instructions

Contents	Comment
Installation instructions for spare part sets and accessories	▪ Access the overview of all the available spare part sets via *W@M Device Viewer* → 🗎 158 ▪ Accessories available for order with Installation Instructions → 🗎 160

Index

0 ... 9

3-A approval . . . 190

A

Access authorization to parameters
- Read access . . . 55
- Write access . . . 55

Access code . . . 55
- Incorrect input . . . 55

Accuracy . . . 174
Adapting the diagnostic behavior . . . 144
Adapting the status signal . . . 144
Additional certification . . . 191
Ambient temperature
- Influence . . . 176

AMS Device Manager . . . 68
- Function . . . 68

Application . . . 163
Application packages . . . 192
Applicator . . . 164
Approvals . . . 189

B

Burst mode . . . 74

C

Cable entries
- Technical data . . . 174

Cable entry
- Degree of protection . . . 42

CE mark . . . 12, 190
Certificates . . . 189
cGMP . . . 190
Check
- Installation . . . 30

Checklist
- Post-connection check . . . 42
- Post-installation check . . . 30

Cleaning
- Cleaning in place (CIP) . . . 157
- Exterior cleaning . . . 157
- Interior cleaning . . . 157
- Sterilization in place (SIP) . . . 157

Climate class . . . 178
Commissioning . . . 76
- Advanced settings . . . 105
- Configuring the measuring device . . . 76

Communication-specific data . . . 71
Compatibility . . . 156
Connecting cable . . . 31, 32
Connecting the measuring device . . . 34
Connecting the signal cables . . . 34
Connecting the supply voltage cables . . . 34
Connection
- see Electrical connection

Connection preparations . . . 34
Connection tools . . . 31
Context menu
- Calling up . . . 52
- Closing . . . 52
- Explanation . . . 52

Current consumption . . . 174

D

Declaration of Conformity . . . 12
Define access code . . . 121
Degree of protection . . . 42, 178
Density . . . 180
Design fundamentals
- Maximum measured error . . . 177
- Repeatability . . . 177

Designated use . . . 10
Device components . . . 15
Device description files . . . 70
Device documentation
- Supplementary documentation . . . 8

Device history . . . 156
Device locking, status . . . 123
Device name
- Sensor . . . 18
- Transmitter . . . 17

Device repair . . . 158
Device revision . . . 70
Device type ID . . . 70
DeviceCare . . . 68
- Device description file . . . 70

Diagnostic behavior
- Explanation . . . 140
- Symbols . . . 140

Diagnostic information
- Design, description . . . 140, 143
- DeviceCare . . . 143
- FieldCare . . . 143
- Light emitting diodes . . . 137
- Local display . . . 139
- Overview . . . 145
- Remedial measures . . . 145
- Web browser . . . 141

Diagnostic list . . . 150
Diagnostic message . . . 139
Diagnostics
- Symbols . . . 139

DIP switches
- see Write protection switch

Direct access . . . 53
Direct access code . . . 48
Disabling write protection . . . 120
Display
- see Onsite display

Display and operating module DKX001 . . . 186
Display area
- For operational display . . . 46

In the navigation view . . . 48
Display values
For locking status . . . 123
Disposal . . . 159
Document
Function . . . 6
Symbols . . . 6
Document function . . . 6
Down pipe . . . 22

E

Editing view . . . 49
Input screen . . . 50
Using operating elements . . . 50, 51
EHDEG-certified . . . 190
Electrical connection
Commubox FXA195 (USB) . . . 63
Computer with Web browser (e.g. Internet Explorer) . . . 63
Degree of protection . . . 42
Field Communicator 475 . . . 63
Field Xpert SFX350/SFX370 . . . 63
Field Xpert SMT70 . . . 63
Measuring device . . . 31
Operating tool (e.g. FieldCare, AMS Device Manager, SIMATIC PDM) . . . 63
Operating tools
Via HART protocol . . . 63
Via service interface (CDI-RJ45) . . . 64
Via WLAN interface . . . 65
VIATOR Bluetooth modem . . . 63
Web server . . . 64
WLAN interface . . . 65
Electromagnetic compatibility . . . 179
Electronics module . . . 15
Enabling write protection . . . 120
Enabling/disabling the keypad lock . . . 56
Endress+Hauser services
Maintenance . . . 157
Repair . . . 158
Environment
Mechanical load . . . 179
Storage temperature . . . 178
Vibration- and shock-resistance . . . 179
Error messages
see Diagnostic messages
Event list . . . 151
Event logbook . . . 151
Ex approval . . . 190
Extended order code
Sensor . . . 18
Transmitter . . . 17
Exterior cleaning . . . 157

F

FDA . . . 190
Field Communicator
Function . . . 69
Field Communicator 475 . . . 69
Field of application
Residual risks . . . 11
Field Xpert
Function . . . 66
Field Xpert SFX350 . . . 66
FieldCare . . . 66
Device description file . . . 70
Establishing a connection . . . 67
Function . . . 66
User interface . . . 68
Filtering the event logbook . . . 152
Firmware
Release date . . . 70
Version . . . 70
Firmware history . . . 156
Flow direction . . . 23, 29
Flow limit . . . 181
Food Contact Materials Regulation . . . 190
Function check . . . 76
Function range
Field Xpert . . . 66
Function scope
AMS Device Manager . . . 68
Field Communicator . . . 69
Field Communicator 475 . . . 69
SIMATIC PDM . . . 69
Functional safety (SIL) . . . 190
Functions
see Parameters

G

Galvanic isolation . . . 173

H

Hardware write protection . . . 122
HART certification . . . 191
HART protocol
Device variables . . . 71
Measured values . . . 71
Help text
Calling up . . . 54
Closing . . . 54
Explanation . . . 54
HistoROM . . . 114

I

Identifying the measuring device . . . 16
Incoming acceptance . . . 16
Influence
Ambient temperature . . . 176
Medium pressure . . . 177
Medium temperature . . . 177
Information on the document . . . 6
Inlet runs . . . 23
Input . . . 164
Inspection
Received goods . . . 16
Inspection check
Connection . . . 42

Installation 22
Installation conditions
Down pipe 22
Inlet and outlet runs 23
Installation dimensions 23
Mounting location 22
Orientation 23
Rupture disk 26
Sensor heating 25
System pressure 24
Thermal insulation 24
Vibrations 25
Installation dimensions 23
Interior cleaning 157

L

Languages, operation options 185
Line recorder 130
Local display 185
Navigation view 47
see Diagnostic message
see In alarm condition
see Operational display
Low flow cut off 173

M

Main electronics module 15
Maintenance tasks 157
Managing the device configuration 114
Manufacturer ID 70
Manufacturing date 17, 18
Materials 182
Maximum measured error 174
Measured values
see Process variables
Measuring and test equipment 157
Measuring device
Configuration 76
Conversion 158
Disposal 159
Mounting the sensor 29
Preparing for electrical connection 34
Preparing for mounting 28
Removing 159
Repairs 158
Structure 15
Switch-on 76
Measuring principle 163
Measuring range
Calculation example for gas 164
For gases 164
For liquids 164
Measuring range, recommended 181
Measuring system 163
Mechanical load 179
Medium pressure
Influence 177
Medium temperature
Influence 177
Menu
Diagnostics 149
Setup 78
Menus
For measuring device configuration 76
For specific settings 105
Mounting dimensions
see Installation dimensions
Mounting location 22
Mounting preparations 28
Mounting tools 28

N

Nameplate
Sensor 18
Transmitter 17
Navigation path (navigation view) 47
Navigation view
In the submenu 47
In the wizard 47
Numeric editor 49

O

Onsite display
Numeric editor 49
Text editor 50
Operable flow range 165
Operating elements 51, 140
Operating keys
see Operating elements
Operating menu
Menus, submenus 44
Structure 44
Submenus and user roles 45
Operating philosophy 45
Operation 123
Operation options 43
Operational display 46
Operational safety 11
Order code 17, 18
Orientation (vertical, horizontal) 23
Outlet runs 23
Output 167
Output signal 167

P

Packaging disposal 21
Parameter
Changing 54
Entering values or text 54
Parameter settings
Administration (Submenu) 117
Advanced setup (Submenu) 106
Burst configuration 1 to n (Submenu) 74
Calculated values (Submenu) 106
Configuration backup (Submenu) 114
Current input 83
Current input (Wizard) 83
Current input 1 to n (Submenu) 126

Current output . . . 85
Current output (Wizard) . . . 85
Data logging (Submenu) . . . 130
Define access code (Wizard) . . . 116
Device information (Submenu) . . . 154
Diagnostics (Menu) . . . 149
Display (Submenu) . . . 110
Display (Wizard) . . . 99
Double pulse output . . . 98
Double pulse output (Submenu) . . . 98, 129
I/O configuration . . . 82
I/O configuration (Submenu) . . . 82
Low flow cut off (Wizard) . . . 103
Measured variables (Submenu) . . . 124
Partially filled pipe detection (Wizard) . . . 104
Pulse/frequency/switch output . . . 89
Pulse/frequency/switch output (Wizard) . . . 89, 91, 94
Pulse/frequency/switch output 1 to n (Submenu) 128
Relay output . . . 96
Relay output 1 to n (Submenu) . . . 128
Relay output 1 to n (Wizard) . . . 96
Reset access code (Submenu) . . . 116
Select medium (Wizard) . . . 81
Sensor adjustment (Submenu) . . . 107
Setup (Menu) . . . 78
Simulation (Submenu) . . . 117
Status input . . . 85
Status input (Submenu) . . . 85
Status input 1 to n (Submenu) . . . 126
System units (Submenu) . . . 78
Totalizer (Submenu) . . . 125
Totalizer 1 to n (Submenu) . . . 108
Totalizer handling (Submenu) . . . 129
Value current output 1 to n (Submenu) . . . 127
Web server (Submenu) . . . 62
WLAN Settings (Submenu) . . . 113
Zero point adjustment (Submenu) . . . 108
Performance characteristics . . . 174
Pharmaceutical compatibility . . . 190
Post-connection check (checklist) . . . 42
Post-installation check . . . 76
Post-installation check (checklist) . . . 30
Potential equalization . . . 37
Power consumption . . . 174
Power supply failure . . . 174
Pressure loss . . . 181
Pressure-temperature ratings . . . 180
Process connections . . . 185
Process variables
Calculated . . . 164
Measured . . . 164
Product safety . . . 12
Protecting parameter settings . . . 120

R

Radio approval . . . 191
RCM-tick symbol . . . 190
Read access . . . 55
Reading measured values . . . 123
Recalibration . . . 157
Reference operating conditions . . . 174
Registered trademarks . . . 8
Remedial measures
Calling up . . . 141
Closing . . . 141
Remote operation . . . 187
Repair . . . 158
Repair of a device . . . 158
Repairs
Notes . . . 158
Repeatability . . . 176
Replacement
Device components . . . 158
Requirements for personnel . . . 10
Response time . . . 176
Return . . . 158
Rupture disk
Safety instructions . . . 26
Triggering pressure . . . 180

S

Safety . . . 10
Sanitary compatibility . . . 190
Sensor
Mounting . . . 29
Sensor heating . . . 25
Sensor housing . . . 180
Serial number . . . 17, 18
Setting the operating language . . . 76
Settings
Adapting the measuring device to the process conditions . . . 129
Administration . . . 116
Advanced display configurations . . . 110
Current input . . . 83
Current output . . . 85
Device reset . . . 153
Double pulse output . . . 98
I/O configuration . . . 82
Local display . . . 99
Low flow cut off . . . 103
Managing the device configuration . . . 114
Medium . . . 81
Operating language . . . 76
Partial filled pipe detection . . . 104
Pulse output . . . 89
Pulse/frequency/switch output . . . 89, 91
Relay output . . . 96
Resetting the totalizer . . . 129
Sensor adjustment . . . 107
Simulation . . . 117
Status input . . . 85
Switch output . . . 94
System units . . . 78
Tag name . . . 78
Totalizer . . . 108
Totalizer reset . . . 129
WLAN . . . 113

Showing data logging 130
Signal on alarm 171
SIL (functional safety) 190
SIMATIC PDM 69
  Function 69
Software release 70
Spare part 158
Spare parts 158
Special connection instructions 38
Special mounting instructions
  Sanitary compatibility 26
Standards and guidelines 191
Status area
  For operational display 46
  In the navigation view 48
Status signals 139, 142
Storage concept 188
Storage conditions 20
Storage temperature 20
Storage temperature range 178
Structure
  Measuring device 15
  Operating menu 44
Submenu
  Administration 116, 117
  Advanced setup 105, 106
  Burst configuration 1 to n 74
  Calculated values 106
  Configuration backup 114
  Current input 1 to n 126
  Data logging 130
  Device information 154
  Display 110
  Double pulse output 98, 129
  Event list 151
  I/O configuration 82
  Input values 126
  Measured values 123
  Measured variables 124
  Output values 127
  Overview 45
  Process variables 106
  Pulse/frequency/switch output 1 to n 128
  Relay output 1 to n 128
  Reset access code 116
  Sensor adjustment 107
  Simulation 117
  Status input 85
  Status input 1 to n 126
  System units 78
  Totalizer 125
  Totalizer 1 to n 108
  Totalizer handling 129
  Value current output 1 to n 127
  Web server 62
  WLAN Settings 113
  Zero point adjustment 108
Supply voltage 173
Surface roughness 185
Switch output 171
Symbols
  Controlling data entries 51
  For communication 46
  For diagnostic behavior 46
  For locking 46
  For measured variable 46
  For measurement channel number 46
  For menus 48
  For parameters 48
  For status signal 46
  For submenu 48
  For wizard 48
  In the status area of the local display 46
  Input screen 50
  Operating elements 50
System design
  Measuring system 163
  see Measuring device design
System integration 70
System pressure 24

T

Technical data, overview 163
Temperature range
  Ambient temperature range for display 185
  Medium temperature 179
  Storage temperature 20
Terminal assignment 34
Terminals 174
Tests and certificates 191
Text editor 50
Thermal insulation 24
Tool tip
  see Help text
Tools
  Electrical connection 31
  For mounting 28
  Transport 20
Totalizer
  Configuration 108
Transmitter
  Turning the display module 29
  Turning the housing 29
Transporting the measuring device 20
Troubleshooting
  General 135
TSE/BSE Certificate of Suitability 190
Turning the display module 29
Turning the electronics housing
  see Turning the transmitter housing
Turning the transmitter housing 29

U

Use of the measuring device
  Borderline cases 10
  Incorrect use 10
  see Designated use

User interface
Current diagnostic event 149
Previous diagnostic event 149
User roles 45
USP Class VI 190

V

Version data for the device 70
Vibration- and shock-resistance 179
Vibrations 25

W

W@M 157, 158
W@M Device Viewer 16, 158
Weight
SI units 181
Transport (notes) 20
US units 182
Wizard
Current input 83
Current output 85
Define access code 116
Display 99
Low flow cut off 103
Partially filled pipe detection 104
Pulse/frequency/switch output 89, 91, 94
Relay output 1 to n 96
Select medium 81
WLAN settings 113
Workplace safety 11
Write access 55
Write protection
Via access code 120
Via write protection switch 122
Write protection switch 122

www.addresses.endress.com

Endress+Hauser

People for Process Automation