User's manual
FLIR Si2 series

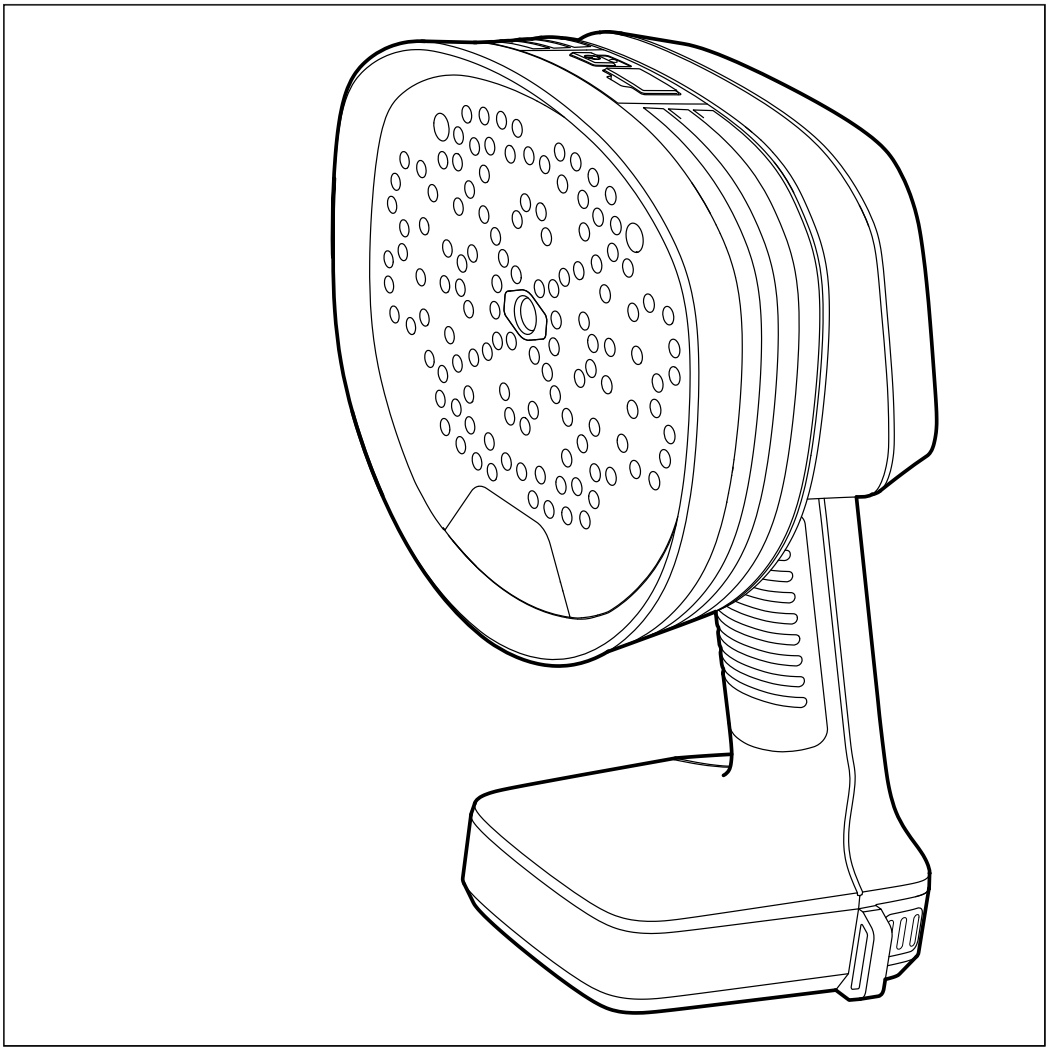

Important note
Before operating the device, you must read, understand, and follow all instructions, warnings, cautions, and legal disclaimers.

Důležitá poznámka
Před použitím zařízení si přečtěte veškeré pokyny, upozornění, varování a vyvázání se ze záruky, ujistěte se, že jim rozumíte, a řiďte se jimi.

Vigtig meddelelse
Før du betjener enheden, skal du du læse, forstå og følge alle anvisninger, advarsler, sikkerhedsforanstaltninger og ansvarsfraskrivelser.

Wichtiger Hinweis
Bevor Sie das Gerät in Betrieb nehmen, lesen, verstehen und befolgen Sie unbedingt alle Anweisungen, Warnungen, Vorsichtshinweise und Haftungsausschlüsse

Σημαντική σημείωση
Πριν από τη λειτουργία της συσκευής, πρέπει να διαβάσετε, να κατανοήσετε και να ακολουθήσετε όλες τις οδηγίες, προειδοποιήσεις, προφυλάξεις και νομικές αποποιήσεις.

Nota importante
Antes de usar el dispositivo, debe leer, comprender y seguir toda la información sobre instrucciones, advertencias, precauciones y renuncias de responsabilidad.

Tärkeä huomautus
Ennen laitteen käyttämistä on luettava ja ymmärrettävä kaikki ohjeet, vakavat varoitukset, varoitukset ja lakitiedotteet sekä noudatettava niitä.

Remarque importante
Avant d'utiliser l'appareil, vous devez lire, comprendre et suivre l'ensemble des instructions, avertissements, mises en garde et clauses légales de non-responsabilité.

Fontos megjegyzés
Az eszköz használata előtt figyelmesen olvassa el és tartsa be az összes utasítást, figyelmeztetést, óvintézkedést és jogi nyilatkozatot.

Nota importante
Prima di utilizzare il dispositivo, è importante leggere, capire e seguire tutte le istruzioni, avvertenze, precauzioni ed esclusioni di responsabilità legali.

重要な注意
デバイスをご使用になる前に、あらゆる指示、警告、注意事項、および免責条項をお読み頂き、その内容を理解して従ってください。

중요한 참고 사항
장치를 작동하기 전에 반드시 다음의 사용 설명서와 경고, 주의사항, 법적 책임제한을 읽고 이해하며 따라야 합니다.

Viktig
Før du bruker enheten, må du lese, forstå og følge instruksjoner, advarsler og informasjon om ansvarsfraskrivelse.

Belangrijke opmerking
Zorg ervoor dat u, voordat u het apparaat gaat gebruiken, alle instructies, waarschuwingen en juridische informatie hebt doorgelezen en begrepen, en dat u deze opvolgt en in acht neemt.

Ważna uwaga
Przed rozpoczęciem korzystania z urządzenia należy koniecznie zapoznać się z wszystkimi instrukcjami, ostrzeżeniami, przestrogami i uwagami prawnymi. Należy zawsze postępować zgodnie z zaleceniami tam zawartymi.

Nota importante
Antes de utilizar o dispositivo, deverá proceder à leitura e compreensão de todos os avisos, precauções, instruções e isenções de responsabilidade legal e assegurar-se do seu cumprimento.

Важное примечание
До того, как пользоваться устройством, вам необходимо прочитать и понять все предупреждения, предостережения и юридические ограничения ответственности и следовать им.

Viktig information
Innan du använder enheten måste du läsa, förstå och följa alla anvisningar, varningar, försiktighetsåtgärder och ansvarsfriskrivningar.

Önemli not
Cihazı çalıştırmadan önce tüm talimatları, uyarıları, ikazları ve yasal açıklamaları okumalı, anlamalı ve bunlara uymalısınız.

重要注意事项
在操作设备之前，您必须阅读、理解并遵循所有说明、警告、注意事项和法律免责声明。

重要注意事項
操作裝置之前，您務必閱讀、了解並遵循所有說明、警告、注意事項與法律免責聲明。

Table of contents

1 Safety information ... 1
1.1 Radio ... 1
1.2 Handling and operation ... 1
1.3 Battery and charging ... 1
1.4 Declaration of conformity ... 2
2 Notice to user ... 3
2.1 Register your camera ... 3
2.2 Online documentation ... 3
2.3 About this manual ... 3
2.4 Support ... 3
2.5 Training ... 3
3 Introduction ... 4
4 Getting started ... 5
5 Camera parts ... 6
5.1 View from the front ... 6
5.2 View from the rear ... 7
5.3 View from the top ... 8
5.4 E-label ... 8
5.5 Serial number ... 8
6 User interface ... 9
6.1 General ... 9
6.2 Quick menu ... 9
6.3 Archive indicators ... 10
6.4 Wi-Fi indicator ... 10
6.5 Acoustic image ... 10
7 Basic operation ... 11
7.1 Safety information ... 11
7.2 Battery ... 11
7.2.1 Battery cover ... 11
7.2.2 Install the battery ... 11
7.2.3 Remove the battery ... 11
7.2.4 Battery indicator ... 11
7.2.5 Low battery warning ... 11
7.3 Battery charging ... 12
7.3.1 Charge the battery using the battery charger ... 12
7.4 Power on/off ... 12
7.4.1 Power on ... 12
7.4.2 Power off ... 12
7.4.3 Power LED ... 12
7.5 Take a snapshot ... 12
7.6 Record a video ... 13
7.7 Archive ... 13
7.8 Zoom ... 13
7.9 File transfer ... 13
7.9.1 Export files to a USB memory stick ... 13
8 Locating sound sources ... 15
8.1 Basic steps to sound location ... 15
8.2 Filters ... 15
8.2.1 Automatic filter selection ... 15
8.2.2 Manual filter selection ... 15
8.2.3 Change the filter setting ... 16
8.3 Single-source and Multi-source modes ... 16
8.3.1 Switch between the modes ... 16
8.4 Reflections ... 16

8.5 Position the camera ... 16
8.6 Save and analyze sounds ... 17
8.6.1 Example: Large sound source ... 17
9 Leak detection ... 18
9.1 Work flow ... 18
9.2 Leak analysis results ... 18
9.3 Leak analysis parameters ... 19
9.3.1 Set the leak analysis parameters ... 20
9.4 Distance ... 20
9.4.1 Auto Distance ... 20
9.4.2 Set the distance manually ... 20
10 Partial discharge detection ... 21
10.1 Work flow ... 21
10.2 Partial discharge parameters ... 22
10.2.1 Distance ... 22
10.3 Results overview ... 22
10.4 Partial discharge analysis results ... 22
10.4.1 PRPD pattern ... 23
10.4.2 Severity assessment ... 23
11 Mechanical fault detection ... 24
11.1 Work flow ... 24
11.2 Mechanical fault analysis results ... 24
11.2.1 SPL ... 24
11.2.2 Crest factor ... 25
11.2.3 Kurtosis ... 25
11.3 Guidelines ... 25
12 FLIR Acoustic Camera Viewer ... 26
12.1 Setup ... 26
12.2 Create a FLIR Acoustic Camera Viewer account ... 26
12.3 Connect the camera to the internet ... 26
12.4 Pairing ... 27
12.5 Automatic upload ... 27
12.6 Manual upload ... 27
12.7 Access the FLIR Acoustic Camera Viewer ... 27
12.8 Import files ... 27
13 FLIR Thermal Studio ... 29
14 Camera settings ... 30
14.1 Network settings ... 30
14.2 Change mode ... 30
14.3 Time settings ... 30
14.4 Leak mode settings ... 30
14.5 Power mode settings ... 31
14.6 Advanced settings ... 31
14.7 Device info ... 31
15 Maintenance and cleaning ... 32
15.1 Clean the camera ... 32
15.1.1 Camera chassis and screen ... 32
15.1.2 Microphone array ... 32
15.1.3 Battery and charger ... 32
15.2 Storage ... 32
15.3 Calibration ... 32
16 Updating the camera ... 33
16.1 Update the camera Over-The-Air (OTA) ... 33
16.2 Update the camera via USB memory stick ... 33

17 Disposal of electronic waste 34
17.1 Battery removal 34
18 Disclaimers 35
18.1 Legal disclaimer 35
18.2 Export controls 35
18.3 Patents 35
18.4 Quality assurance 35
18.5 Third-party licenses 35
18.6 Usage statistics 35
18.7 Copyright 35

1 Safety information

1.1 Radio

WARNING

This device complies with Part 15 of the FCC Rules and with Industry Canada licence-exempt RSS standard(s). Operation is subject to the following two conditions:

1. this device may not cause harmful interference, and
2. this device must accept any interference received, including interference that may cause undesired operation.

WARNING

This equipment contains specified radio equipment that has been certified to the Technical Regulation Conformity Certification under the Japanese Radio Law.

当該機器には電波法に基づく、技術基準適合証明等を受けた特定無線設備を装着している。

CAUTION

This portable transmitter with its antenna has shown compliance with FCC's SAR limits for general population / uncontrolled exposure. The maximum listed SAR level is 1,5 W/kg (head) and 1,5 W/kg (body) at 0 mm. The antenna used for this device must not be co-located or operating in conjunction with any other antenna or transmitter.

Note In the camera settings, there is an e-label with certification and compliance information. For more information, see section 5.4 *E-label*.

1.2 Handling and operation

WARNING

If you do not obey these Warnings, injury to persons can occur.

- Do not touch the heat sinks when the camera is powered on. The heat sinks become hot when the power is on.
- Take special care around heavy machinery when carrying the camera using the neck strap. The neck strap is rigid and does not have a separate safety release mechanism.

CAUTION

If you do not obey these Cautions, damage to the equipment can occur.

- Protect the camera and accessories from dirt, dust, impacts, and liquids.
- Protect the microphone panel from physical contact. Do not touch the microphone holes.
- Keep the USB port covered to prevent water ingress.
- Do not look directly at the LED lights placed on the microphone panel.
- Only use the accessories and spare parts that FLIR provides.
- Do not disassemble the camera.
- Do not use a damaged camera, battery, or accessories.

1.3 Battery and charging

For safety information related to the battery, refer to the battery documentation www.rrc-ps.com/manual2054.

For safety information related to the battery charger, refer to the battery charger documentation www.rrc-ps.com/manualSMB-MBC.

1.4 Declaration of conformity

The full text of the Declaration of conformity is available at the following internet address: http://support.flir.com/resources/f34f.

2 Notice to user

2.1 Register your camera

Register your camera to receive an extended warranty and other related benefits.

To register the camera, go to http://support.flir.com/camreg.

To access the registration form, you must log in to your FLIR account or sign up for a new account.

You will also need the serial number of your camera. A label with the serial number is available at the bottom of the camera. See also section 5.5 *Serial number*.

To complete the registration, you must enter a verification code into the camera. The code is available in your FLIR account, under *My Products*.

2.2 Online documentation

Our manuals are continuously updated and published online.

To access the FLIR Si2 series user manual and other product documentation, go to http://support.flir.com/resources/f34f.

To access the manuals for our other products, as well as manuals for our discontinued products, go to https://support.flir.com/resources/app.

2.3 About this manual

FLIR Systems issues generic manuals that cover several models within a camera series. This means that this manual may contain descriptions and explanations that do not apply to your particular camera model.

The authoritative version of this publication is English. In the event of divergences due to translation errors, the English text has precedence. Any late changes are first implemented in English.

2.4 Support

Contact our Technical Support Center if you experience problems or have any questions about your product: https://support.flir.com.

2.5 Training

For training resources and courses, go to https://www.flir.com/support-center/training.

3 Introduction

The FLIR Si2 series represents the most advanced acoustic performance and decision support available on the market today. Designed to improve productivity while preventing critical failures and reducing energy costs and maintenance expenses, the FLIR Si2 series acoustic imaging cameras provide an easy-to-use, stand-alone method for locating and quantifying air and gas leaks, partial discharges and mechanical faults.

This lightweight, one-handed solution is safe to use with minimal training, and delivers immediate in-the-field decision support. In addition to market-leading sensitivity and detection range, the FLIR Si2 employs advanced functionalities such as Auto Filter, Auto Distance (FLIR Si2-LD and FLIR Si2 Pro), and Advanced AI for optimal performance and data accuracy (all models).

For enterprise-level customers the FLIR Si2 series also provides easy data export for reporting and worksheets, Fleet Management tools, automatic data upload and online storage, and API Data Integration for a seamless asset health data transfer into your preferred Asset Management software.

The FLIR Si2 series consists of three next-generation acoustic imaging cameras for different applications.

- FLIR Si2-LD for leak and industrial gas detection and mechanical fault issues.
- FLIR Si2-PD for partial discharge detection.
- FLIR Si2 Pro including all modes of operation.

4 Getting started

Note Before operating the camera, you must read, understand, and follow the warnings and cautions in section 1 *Safety information*.

1. Fully charge the battery.
2. Remove the battery cover.
3. Align the battery and push it into the camera battery compartment.
4. Place the battery cover onto the battery and press it gently until it clicks into place.
5. Push the On/Off button to power on the camera. The green Power LED indicates that the camera is on.
6. Wait until the camera screen turns on. The camera is now ready to use.
7. Follow the instructions on the camera screen to set up the camera according to your preferences.
   You can also set up the camera to upload snapshots and videos for storage online. To enable upload, you must connect the camera to the internet and pair the camera with the FLIR Acoustic Camera Viewer cloud service. Use a computer or other device with internet access and follow the instructions on the camera screen.

   Note You can select the settings as a part of the initial setup of the camera or later at any time via the Settings menu.
8. Aim the camera toward the object of interest.
   The camera will highlight any detected sound source on the screen.

5 Camera parts

5.1 View from the front

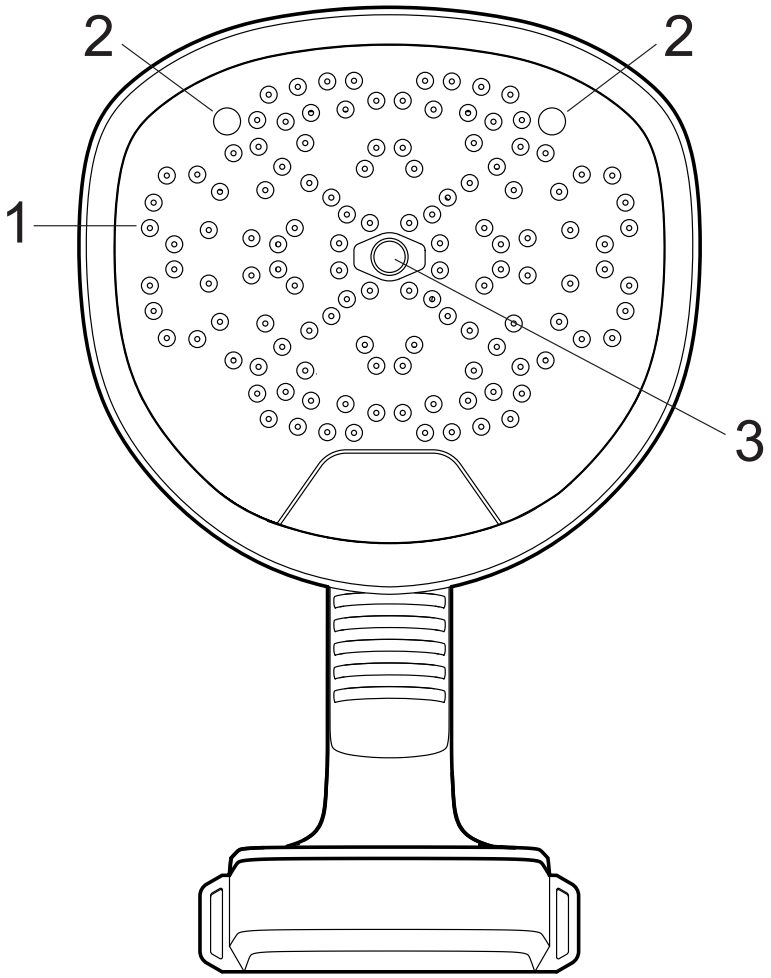

1. Microphones
2. LED lamps
3. Digital camera

5.2 View from the rear

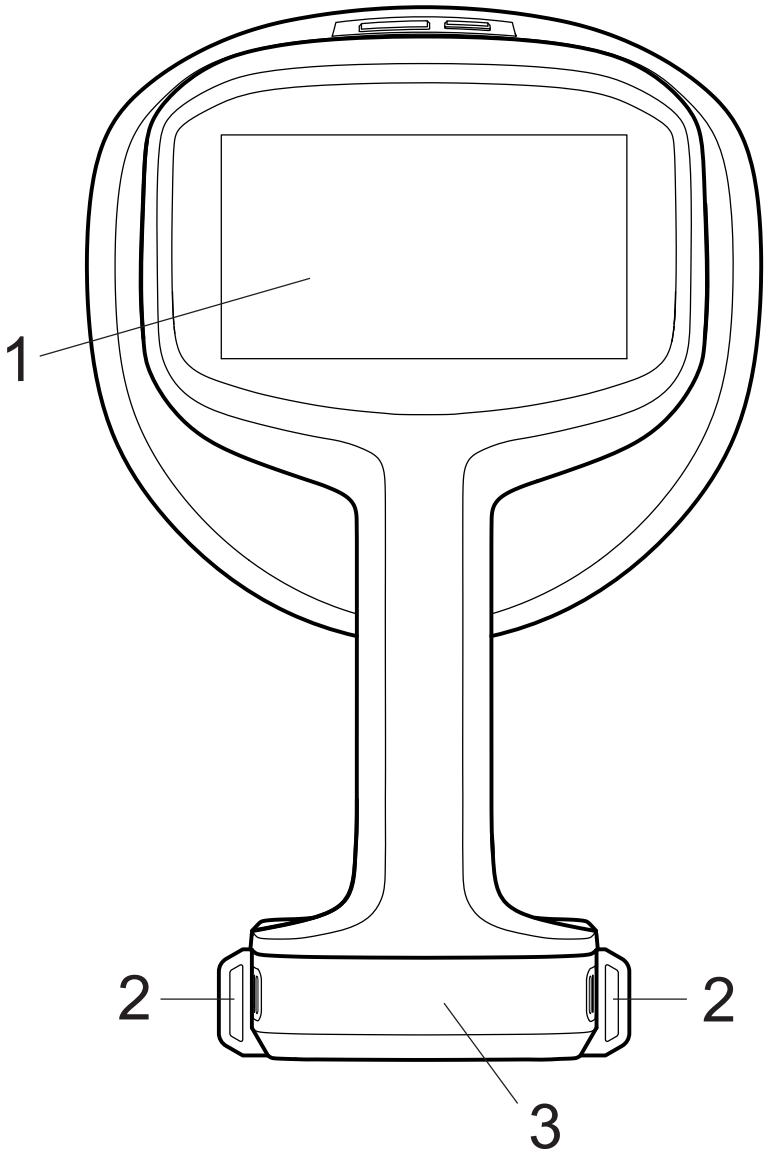

1. LCD screen
2. Neck strap attachment points
3. Battery cover

5.3 View from the top

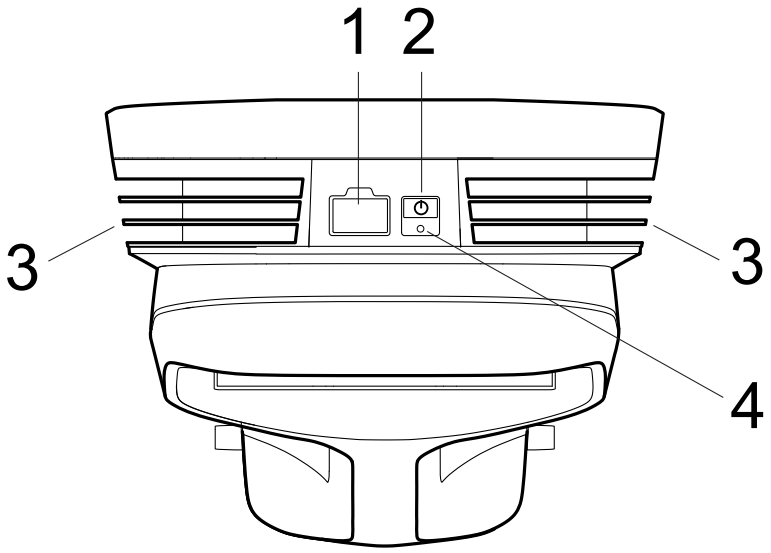

1. USB port
2. On/Off button
3. Heat sinks
4. Power LED

5.4 E-label

The e-label is the primary identification plate for the camera. It contains certification and compliance information and other relevant product details.

The e-label is available in the camera settings:

1. Tap the Settings button.
2. Tap the *Device info* field at the bottom of the Settings menu.
3. Swipe up/down to scroll.
4. To close the e-label, scroll down and then tap *Close*.

5.5 Serial number

A label with the serial number is available at the bottom of the camera.

The serial number is also available in the camera settings, at the bottom of the Settings menu and in the e-label (see section 5.4 *E-label*).

6 User interface

6.1 General

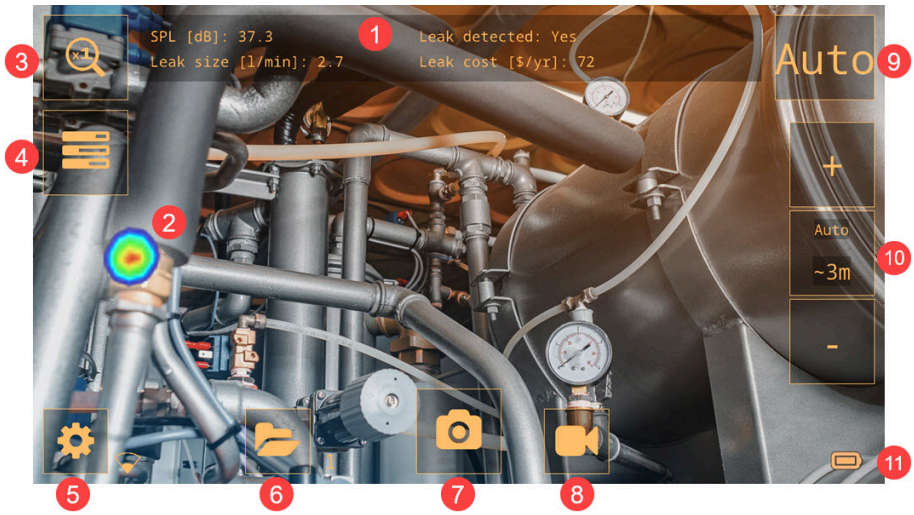

1. Analysis results (mode specific)
2. Acoustic image
3. Zoom button
4. Quick menu button
5. Settings button
6. Archive button
7. Snapshot button
8. Record button
9. Filter button
10. Distance setting
11. Battery indicator

6.2 Quick menu

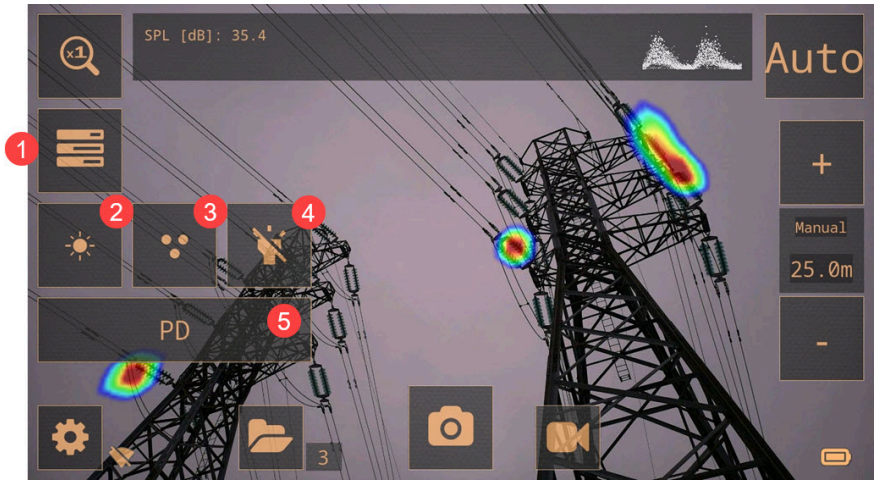

1. Quick menu button: Tap to open/close the Quick menu
2. Brightness button: Tap to adjust the brightness of the screen.
3. Source button: Tap to switch between the Single-source and Multi-source modes.
4. Lamp button: Tap to switch the lamp on and off.

5. Mode button: Tap to cycle through the application mode options: LD (Leak detection), PD (Partial discharge), Mechanical. The available application modes depend on the camera model.

6.3 Archive indicators

The number of files in the archive is displayed next to the Archive button.

Two dots next to the number indicates that files are being uploaded to the FLIR Acoustic Camera Viewer cloud service.

6.4 Wi-Fi indicator

	Excellent Wi-Fi connection strength.
	Good Wi-Fi connection strength.
	Satisfactory Wi-Fi connection strength.
	Poor Wi-Fi connection strength.
	No Wi-Fi connection.

6.5 Acoustic image

The acoustic image shows the location of a sound source, using colors ranging from red in the center to blue in the periphery.

The camera displays one or multiple sound sources, depending on the selected mode; Single-source or Multi-source. For more information, see section 8.3 *Single-source and Multi-source modes*.

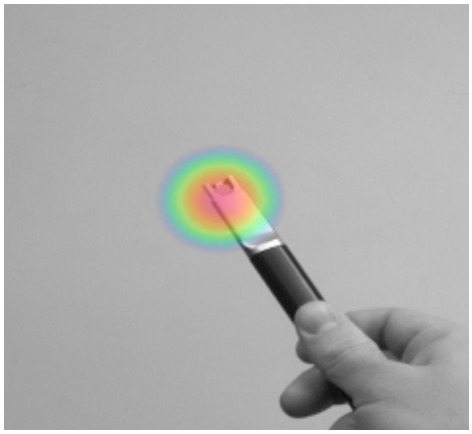

7 Basic operation

7.1 Safety information

Before operating the camera, you must read, understand, and follow the warnings and cautions in section 1 *Safety information*.

7.2 Battery

7.2.1 Battery cover

To remove the battery cover, push the ends of the cover. Then lift the cover off the camera.

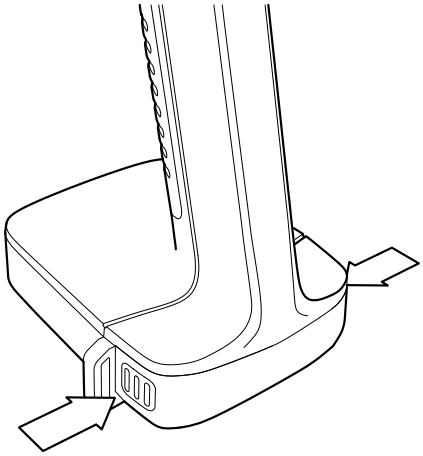

7.2.2 Install the battery

1. Remove the battery cover.
2. Align the battery and push it into the camera battery compartment.
3. Place the battery cover onto the battery and press it gently until it clicks into place.

7.2.3 Remove the battery

1. Power off the camera.
2. Remove the battery cover.
3. Pull the battery out of the camera.

7.2.4 Battery indicator

To check the battery level, push the indicator button on the battery. The lights indicate the battery level.

Indicator lights	Battery level (%)
■ ■ ■ ■	100–76
■ ■ ■ □	51–75
■ ■ □ □	26–50
■ □ □ □	10–25
■ □ □ □ (flashing)	below 10

7.2.5 Low battery warning

When the battery is running low, the Power LED at the top of the camera is flashing red, and a message indicating low battery appears on the screen.

7.3 Battery charging

CAUTION

When you connect the power supply to a mains socket, select a socket that is easy to access. Should a hazardous situation occur, you must be able to easily disconnect the power supply.

Note It is good practice to disconnect the power supply from the mains socket when not in use.

7.3.1 Charge the battery using the battery charger

1. Put the battery in the battery charger.
2. Connect the power supply to the battery charger.
3. Connect the power supply to a mains socket.

7.3.1.1 Battery charger indicator

- When the battery is inserted, the light on the battery charger starts flashing red and green.

  Note Continuous red flashing light indicates a malfunction or exceeding temperature limits.
- During the charging, the light is steady yellow.
- When the battery is fully charged, the light is steady green.

7.4 Power on/off

7.4.1 Power on

To power on the camera, push the On/Off button.

7.4.2 Power off

To power off the camera, push and hold the On/Off button.

7.4.3 Power LED

The Power LED at the top of the camera shows the camera status:

- Green: ON
- Red: Shutting down
- Flashing red: Battery running low

7.5 Take a snapshot

When you take a snapshot, the camera captures the current camera image and the acoustic image.

The camera also saves a 4 seconds recording of the strongest sound signal. Keeping the camera steady will help you capture a clear sound signal.

Before saving the snapshot, you can enter additional information, such as comments, and change settings. This information will be saved in the snapshot.

To take a snapshot, do the following:

1. Tap the Snapshot button.
2. A preview with editing options is displayed.
3. Tap *Change* to enter information or change a setting.
4. To save the snapshot, tap *Save*.

7.6 Record a video

1. To start the recording, tap the Record button.
2. To stop the recording, tap the Stop button.
3. A preview with editing options is displayed.
4. Tap *Change* to enter information or change a setting.
5. To save the video, tap *Save*.

7.7 Archive

To open the archive, tap the Archive button.

In the archive, you can do the following:

- At the bottom of the screen, swipe left/right to scroll through the snapshots thumbnails.
- Tap a thumbnail. This displays a full view of the snapshot and additional information.
- Manually upload files to your FLIR Acoustic Camera Viewer. For more information, see section 12.6 *Manual upload*.
- To exit the archive, tap the Exit button at the left of the screen.

Note

- Snapshots and videos are automatically removed from the camera, after they have been uploaded to the FLIR Acoustic Camera Viewer cloud service or exported to a USB memory stick.
- The number of files in the archive is displayed next to the Archive button.

7.8 Zoom

The camera has a digital zoom, which can be used to narrow the camera's field of view.

Tap the Zoom button to cycle through the available zoom options: 1x, 2x, and 8x.

7.9 File transfer

Snapshot and video files from the camera can be imported to the FLIR Acoustic Camera Viewer or opened in FLIR Thermal Studio for further analysis and reporting.

You can transfer snapshot and video files from the camera using one of the following methods:

- Upload the files to the FLIR Acoustic Camera Viewer cloud service, see section 12 *FLIR Acoustic Camera Viewer*.
- Export the files to a USB memory stick, see section 7.9.1 *Export files to a USB memory stick*.

Note Snapshots and videos are automatically removed from the camera, after they have been uploaded to the FLIR Acoustic Camera Viewer cloud service or exported to a USB memory stick.

7.9.1 Export files to a USB memory stick

Note Only use the USB memory stick supplied with the camera. Other memory sticks may lead to loss of data.

1. Power on the camera.
2. Open the USB port cover at the top of the camera.
3. Insert the USB memory stick. This displays a dialog on the camera screen.
4. Tap *Yes* to start the transfer.
5. During the transfer, a progress bar is displayed.
   To stop the transfer, tap *Stop*.

   Note Do not the remove the USB memory stick while the transfer is in progress.

6. When the transfer is completed, the live view will be displayed.
7. Remove the USB memory stick. Put the USB port cover back in place.

8 Locating sound sources

8.1 Basic steps to sound location

- In the Leak detection and Partial discharge modes, it is recommended to use the Auto filter.
- In the Mechanical mode, it is recommended to start with the default-selected filter. Later, you can test if other filter settings are better for the current situation.
- Use the Multi-source mode to scan a large area quickly and find several sound sources. To inspect interesting sound sources more closely, switch to Single-source mode.
- Keep in mind that in the camera only analyzes and displays results for the strongest sound source.
- Make sure a displayed source is a physical sound source and not a reflection.
- It is easier to find the location of the sound source if you move the camera around and look at the source from different angles.
- Analyzing snapshots and videos in the FLIR Acoustic Camera Viewer or in FLIR Thermal Studio can help you find the exact location of a sound source.

8.2 Filters

The camera has different filters that help locate various sound sources. These filters limit the frequency range that the camera uses to detect sound sources. The filters typically filters out the background noise, allowing the camera to display only the interesting sound sources on the screen.

8.2.1 Automatic filter selection

With the Auto filter, the camera automatically selects the filter that is best suited for the current situation. The Auto filter also eliminates known industrial disturbances, by actively taking into account the environment where the camera is being used.

The Auto filter is enabled by default in the Leak detection and Partial discharge modes.

The Auto filter is not available in Mechanical mode.

8.2.2 Manual filter selection

In the Mechanical mode, you select the filter manually.

In the Leak detection and Partial discharge modes, manual filter selection can be useful if there are significant noise disturbances in the environment.

Keep in mind that the most suitable filter may depend not only on the sound source of interest, but also on the background noise.

The available filters depend on the selected application mode.

- *Auto*
  Automatically selects the most suitable filter. (Not available in Mechanical mode.)
- *Norm* (10 to 65 kHz)
  Filters out low frequency background noise. (Not available in Leak detection mode.)
- *High* (20 to 65 kHz)
  Filters out most background noise sources with a good detection distance.
- *Ultr* (30 to 130 kHz)
  The best alternative for situations with strong background noise. Typically only to be used at short distances.
- *Full* (2 to 130 kHz)
  This filter uses the full frequency range of 2 to 130 kHz, but it is not ideal for detecting leaks or partial discharges as it is influenced by low-frequency background noise and may not be able to detect very quiet sound sources. This filter is intended for experienced users and must be enabled on the Settings menu; select *Advanced settings* > *Available filters* = *All*.

8.2.3 Change the filter setting

Note In the Leak detection and Partial discharge modes, manual filter selection is disabled by default and no Filter button is available. Manual filter selection is enabled on the Settings menu; select *Advanced settings* > *Filter mode* = *Manual*.

To change the filter setting, tap the Filter button repeatedly and cycle through the filter options.

General guidelines:

- If there is only little background noise, try the *Norm* filter.
- In the presence of strong background noise, the *High* or *Ultr* filter will likely work better.

8.3 Single-source and Multi-source modes

The Single-source mode is useful when you are trying to locate a single sound source, while the Multi-source mode is more effective when you are trying to locate multiple sound sources.

In Single-source mode, the camera displays only the sound source with the highest intensity. The location of the sound source is highlighted in color. If there are multiple sound sources with the same or almost the same intensity, all of them will be displayed.

In Multi-source mode, the camera displays multiple sound sources. The sound sources are highlighted in color and the strongest source is marked with a crosshair. The camera analyzes and displays results for the strongest sound source. The camera will not display sound sources that are considerably weaker than the strongest source.

The strongest sound source (in both Single-source and Multi-source mode) depends on the currently selected filter, meaning that different sound sources may be displayed when you use different filters. See also section 8.2 *Filters*.

Keep in mind that the camera analyzes and displays results for the sound coming from the strongest sound source. To locate and examine a weaker sound source in the presence of a strong sound source, move or rotate the camera so that the strong sound source is clearly outside the camera's field of view. You can also use the Zoom button to narrow the camera's field of view.

8.3.1 Switch between the modes

To switch between the Single-source and Multi-source modes, tap the Quick menu button and then tap the Mode button.

8.4 Reflections

The camera displays physical sound sources, but also any reflections from them.

To confirm that a displayed source is a physical sound source and not a reflection, move around and observe the source from different directions. If the source location remains the same from all directions, it is a physical sound source. If the source location moves along a surface or disappears when you move around, it is likely a reflection.

Using the Multi-source mode (see section 8.3 *Single-source and Multi-source modes*), you may be able to see both the physical sound source and one or more reflections. By moving the camera around, you can identify which sources are reflections.

8.5 Position the camera

Changing the position of the camera and looking at the sound source from different angles makes it easier to find the location of the sound source.

A sound source can be directional, meaning that the sound level differs depending on the direction. Again, it is useful to move the camera around and look at the sound source from different angles.

The minimum distance between the sound source and the camera should be around 0.3 meters. If the distance is shorter than this, the location of sound sources will not be accurately displayed. Additionally, the optical camera will not focus at such short distances.

In practice, the camera can be used at distances up to 200 meters. However, strong sound sources in an otherwise quiet environment can be detected at even larger distances. Weak sound sources usually require the camera to be closer.

8.6 Save and analyze sounds

It is often useful to take snapshots and record videos of interesting sound sources from different angles. Snapshots and videos can be further analyzed in the FLIR Acoustic Camera Viewer or in FLIR Thermal Studio.

When capturing several snapshots from different angles, use the one that displays the highest SPL levels. This will facilitate further analysis.

By adjusting the dynamic range in FLIR Acoustic Camera Viewer or FLIR Thermal Studio, you can analyze the sound source more closely:

- Decrease the dynamic range to find the exact location of the sound source.
- Increase the dynamic range to identify if there are multiple sound sources.

8.6.1 Example: Large sound source

If the sound source is large, like a large vibrating surface, the highlighted sound source on the camera screen may seem smaller than the actual source. The source may also appear to move around as you move around the surface, depending on which point of the surface is closest to the camera.

By analyzing a snapshot or video recording in FLIR Acoustic Camera Viewer or FLIR Thermal Studio and increasing the dynamic range, you may be able to determine the actual size of the sound source.

9 Leak detection

Note The availability of the leak detection feature depends on the camera model.

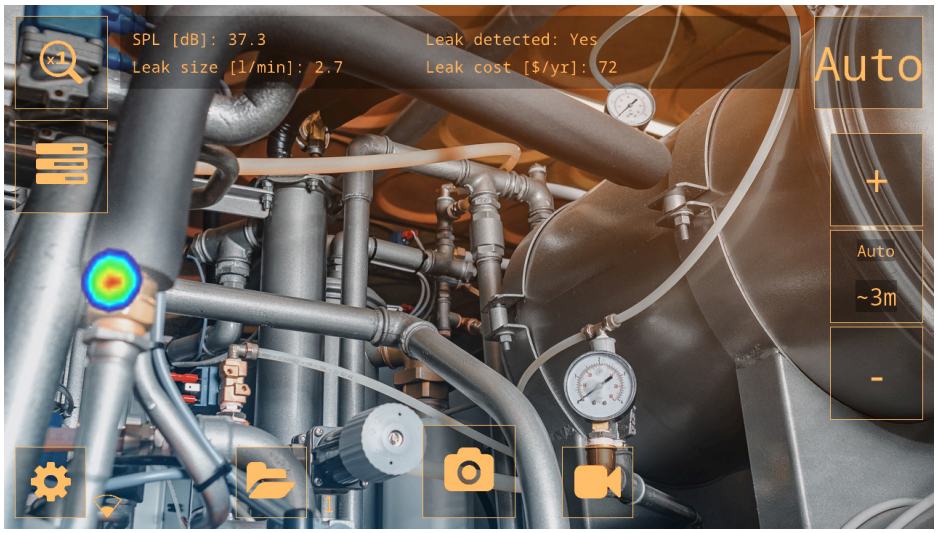

The camera can detect all kinds of pressurized gas leaks and vacuum leaks, by analyzing the sound emitted by the leak. In addition to compressed air leaks, the camera is able to detect leaks of various industrial gases.

By filtering out the background noise and focusing on the ultrasonic frequencies, where the sound of a leak typically is much stronger, the camera can determine if the sound source is likely to be a leak.

When a leak is detected, the camera will estimate the size of the leak and display an estimate of the annual cost of the detected leak.

The leak size and leak cost estimates both rely on the distance setting and the leak analysis parameters entered by the operator.

9.1 Work flow

1. Make sure the Leak mode is selected.
2. Set the leak analysis parameters.
3. Make sure Auto Distance is selected.
4. Start with the Auto filter. Later, you can test if other filter settings are better for the current situation.
5. Use the Multi-source mode first, which enables you to scan larger areas and find several sound sources at the same time.
6. To inspect interesting sound sources more closely, switch to Single-source mode.
7. When a leak is detected, the camera displays the leak size and cost at the top of the screen.
8. You can take snapshots and videos of the detected leak for further inspection and reporting in the FLIR Acoustic Camera Viewer or FLIR Thermal Studio.

9.2 Leak analysis results

The camera displays the following analysis results in the Leak mode:

- *SPL*: Sound Pressure Level is a measure of the strength of a sound.
- *Leak detected*: Indicates when the camera considers a detected sound to be a leak.
- *Leak size*: The estimated size of a detected leak.
- *Leak cost*: The estimated cost of a detected leak.

Note

- The accuracy of the leak size and leak cost estimates depends on the correct input of the distance setting and leak analysis parameters.
- The strength of the sound from a gas leak will depend on from which direction you observe the leak. Therefore, the size and cost estimates will also depend a bit on the measurement direction.
- The absolute SPL reading depends on the selected filter. To ensure that the results are comparable across different filters, the camera displays a normalized SPL value, that matches what the result would be with a measurement bandwidth of 20 kHz.

9.3 Leak analysis parameters

To obtain accurate estimates of leak size and leak cost, it is important to set the leak analysis parameters correctly.

When you take a snapshot of a detected leak, the camera saves also the current leak analysis parameters settings. This means you can edit the parameters later using the FLIR Acoustic Camera Viewer or FLIR Thermal Studio.

- Leak type
  This setting impacts the camera's assessment of the leak size. The camera can detect all types of pressurized gas leaks, but to assess the leak size accurately the camera needs information about the specific gas type.
- Leak unit
  The unit to use for the displayed leak size.
- Currency
  The currency to use for the displayed leak cost.
- Mass/Energy/Volume cost
  The cost setting depends on the selected Leak type and Leak cost calculation settings; Mass cost (price per kilogram), Energy cost (price per kWh), or Volume cost (price per cubic meter).

  Note If you change the Currency setting, the cost setting must be updated accordingly.
- Leak cost calculation
  The estimated leak cost can be calculated based on either the mass cost, the energy cost, or the cost per volume.
- Environmental temperature
  The temperature of the air can affect how sound waves propagate through the air. To obtain more accurate results, it is recommended to specify the environmental temperature.
- Relative humidity
  The propagation of sound is affected by the relative humidity of the environment. To obtain more accurate results, it is recommended to specify the relative humidity.
- Leak correction factor
  The camera's ability to estimate leak size is based on a large set of leaks of different types. However, since there are many variables that can impact the leak size, the camera sometimes underestimates or overestimates the size. If the camera's estimates systematically differ from your own observations, you can set a leak correction factor to adjust the estimate. Before displaying the final leak size estimate, the camera multiplies its estimate with the correction factor.
- Specific power
  Specific power is a measure of the energy required to produce a certain amount of compressed air. This option is intended for advanced users; if you are unsure of the specific power of your compressed air system, it is recommended that you leave it at the default value.

- Utilization
  By entering the hours, days, and/or weeks of use, you can describe how often the equipment is being used in practice. The camera will use the resultant utilization figure as a factor in leak cost calculations.

9.3.1 Set the leak analysis parameters

1. Tap the Settings button.
2. Tap *More* to display the next page.
3. Tap *Leak mode settings*.
4. Tap a parameter to change the setting.

9.4 Distance

When estimating the size of a leak, the camera takes into account distance information to adjust for the natural decrease in sound intensity as distance increases.

9.4.1 Auto Distance

With the Auto Distance feature, the camera automatically calculates the distance to the sound source. The distance is displayed in the Auto Distance field.

Tap the center Distance button to switch between Auto Distance and manual distance settings.

Note The availability of the Auto Distance feature depends on the selected application mode and the selected filter.

9.4.2 Set the distance manually

If Auto Distance cannot provide a reliable distance estimate, the camera displays a dash in the Auto Distance field. In this case, you must set the distance manually.

Use the Distance buttons (+ and -) to select the distance to the sound source that you think is the most precise.

10 Partial discharge detection

Note The availability of the partial discharge detection feature depends on the camera model.

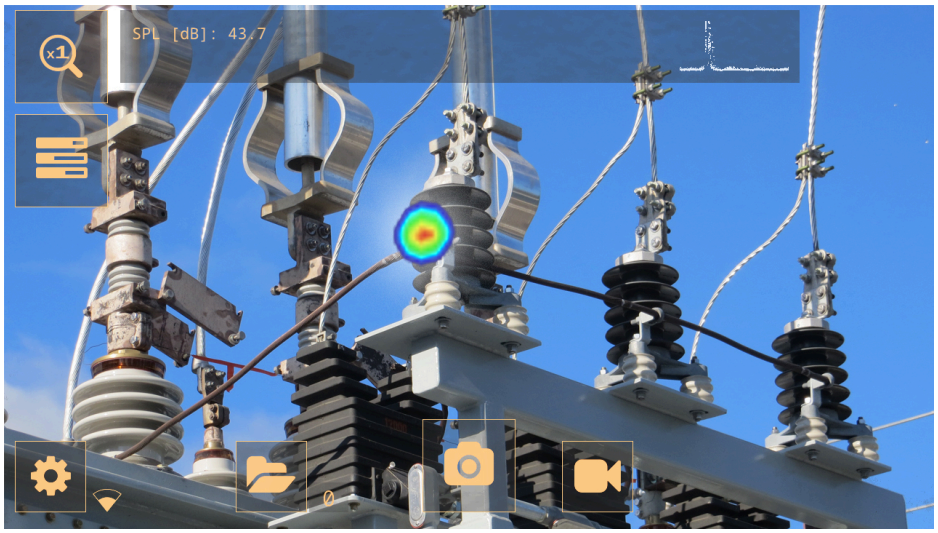

When an electric component begins to fail, one of the first indicators is sound. This sound is caused by partial discharges, that signal the harmful flow of electricity and deteriorate components over time.

The camera detects partial discharges based on the sound they emit.

By filtering out the background noise and focusing on the high and ultrasonic frequencies, where the sound of partial discharges typically is much stronger, the camera can determine if the sound source is likely to be a partial discharge.

When a potential partial discharge is detected, the camera will display a Phase-Resolved Partial Discharge pattern - or PRPD - at the top of the screen.

When you take a snapshot of a potential partial discharge, the camera will perform detailed analysis and provide information regarding the probable type of partial discharge, the severity of the fault, and recommended actions.

The accuracy of the camera's severity assessment relies on the Distance, Voltage, and Component parameters entered by the operator.

For more accurate results, it is also recommended to specify the environmental temperature and relative humidity in the camera settings.

10.1 Work flow

1. Make sure the Partial discharge mode is selected.
2. Start with the Auto filter. Later, you can test if other filter settings are better for the current situation.
3. Use the Multi-source mode first, which enables you to scan larger areas and find several sound sources at the same time.
4. To inspect interesting sound sources more closely, switch to Single-source mode.
5. When a potential partial discharge is detected, the camera displays a PRPD pattern at the top of the screen.
6. To analyze the potential partial discharge, do the following:

   6.1. Tap the Snapshot button.
   6.2. Enter the Distance, Voltage, and Component parameters.
   6.3. Tap the *PD analysis* button.

6.4. The camera displays the analysis results, see section 10.4 *Partial discharge analysis results*.

7. For more accurate results, enter the environmental temperature and relative humidity. On the Settings menu, tap *Power mode settings*.
8. You can take snapshots and videos of the detected partial discharge for further inspection and reporting in the FLIR Acoustic Camera Viewer or FLIR Thermal Studio.

10.2 Partial discharge parameters

When analyzing partial discharges, the camera uses information about the distance, voltage, and type of component. The more exact you specify these parameters, the more precise the severity assessment will be.

When you take a snapshot of a detected partial discharge, the camera saves also the current partial discharge parameters settings. This means you can edit the parameters later using the FLIR Acoustic Camera Viewer or FLIR Thermal Studio.

10.2.1 Distance

Information about the distance, from the camera to the sound source, is used by the camera to adjust for the natural decrease in sound intensity as distance increases.

To set the distance, do the following:

- In live view, use the Distance buttons (+ and -).
- In the snapshot preview, change the Distance setting.

10.3 Results overview

In Partial discharge mode, the camera displays the following at the top of the screen:

- *SPL*: Sound Pressure Level is a measure of the strength of a sound.
- PRPD pattern of a detected partial discharge.

Note The absolute SPL reading depends on the selected filter. To ensure that the results are comparable across different filters, the camera displays a normalized SPL value, that matches what the result would be with a measurement bandwidth of 20 kHz.

10.4 Partial discharge analysis results

This image shows the results displayed by the camera after the analysis of a snapshot.

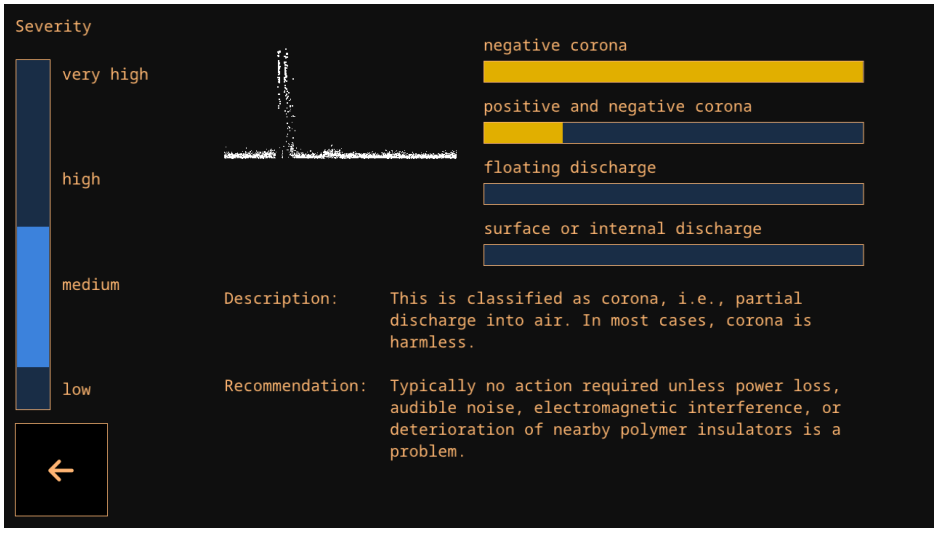

10.4.1 PRPD pattern

The Phase-Resolved Partial Discharge pattern – or PRPD – is a widely used tool for analysis and diagnosis of partial discharge activity.

Partial discharge activity occurs due to defects in electrical components. Each “dot” in the PRPD pattern corresponds to an event caused by a discharging defect.

There are several different types of partial discharges. Each type typically has a distinct PRPD pattern.

Partial discharge types:

- Negative corona
- Positive and negative corona
- Floating discharge
- Surface or internal discharge

The length of the color bar reflects the system’s confidence in identifying a specific type of detected partial discharge. If multiple color bars have nearly identical lengths, it indicates uncertainty about the exact type.

10.4.2 Severity assessment

The severity bar indicates the estimated severity of the detected partial discharge.

The assessed severity is also shown as text. The *Description* describes the type of partial discharge, while the *Recommendation* provides suggestions for the actions to be taken.

Note

- The severity assessment only provides general guidelines based on the likely type of partial discharge and the data available. Always consult an expert to decide on the actions that need to, or need not to, be taken when a partial discharge has been detected.
- The more exact the distance, voltage, and type of component parameters are specified, the more precise the severity assessment will typically be.

11 Mechanical fault detection

Note The availability of the mechanical fault detection feature depends on the camera model.

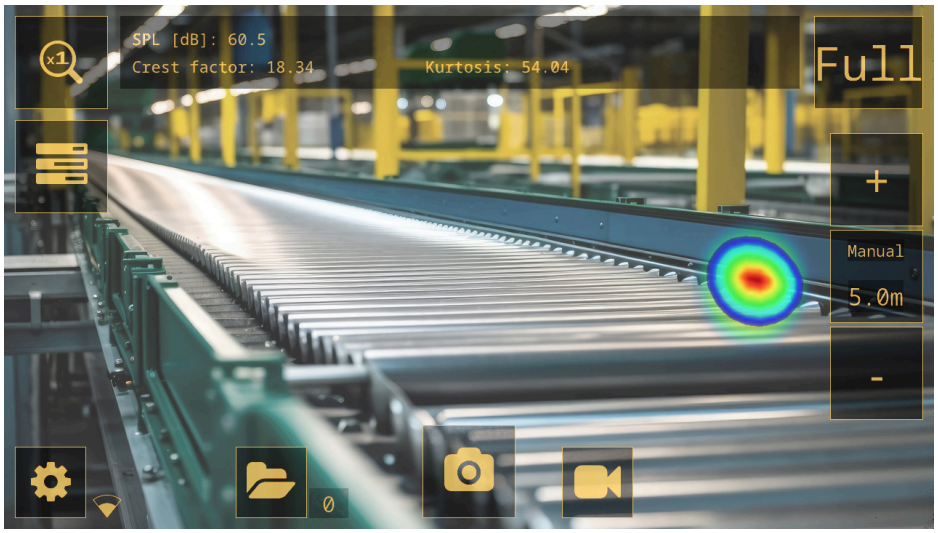

Constant wear and tear of key components in conveyor systems can lead to deterioration. Bearings that are in need of lubrication or are developing faults begin to emit excessive noise.

The camera can detect bearings that emit more noise than the other bearings in the vicinity, providing a precise non-contact means of identifying the bearings that are likely to be in bad condition.

To help identify faulty bearings, the camera provides three metrics: Sound Pressure Level (SPL), Crest factor, and Kurtosis.

11.1 Work flow

1. Make sure the Mechanical mode is selected.
2. You must select the filter manually, typically switching between the *Norm*, *High*, and *Ultr* filters.
3. Use the Multi-source mode first, which enables you to scan larger areas and find several sound sources at the same time.
4. To inspect interesting sound sources more closely, switch to Single-source mode.
5. When a mechanical fault is detected, the camera displays the Sound Pressure Level (SPL), Crest factor, and Kurtosis at the top of the screen.
6. You can take snapshots and videos of the detected faults for further inspection and reporting in the FLIR Acoustic Camera Viewer or FLIR Thermal Studio.

11.2 Mechanical fault analysis results

The camera displays the following analysis results in the Mechanical mode:

- *SPL*
- *Crest factor*
- *Kurtosis*

11.2.1 SPL

Sound Pressure Level (SPL) is a measure of the strength of a sound.

When comparing the Sound Pressure Level (SPL) produced by different bearings, the bearings that are in bad condition will show a significantly higher SPL reading than

bearings in good condition. As the condition gets worse, the SPL reading is likely to increase further.

Note Comparison should be made using the same filter and from a similar distance, otherwise the SPL values cannot be directly compared.

11.2.2 Crest factor

Crest factor is the ratio between the peak amplitude and the root mean square (RMS) value of a signal.

The Crest factor of the sound signal from healthy bearings is typically around 5. If the Crest factor is 6 or above, it is an indication that the bearing might need lubrication or is starting to develop faults.

As the faults develop further, the Crest factor will increase, but after a certain point, the Crest factor might actually begin to decrease. This means that if a bearing shows a very high SPL compared to healthy bearings, but the Crest factor is relatively low, the condition of the bearing might already be critical.

11.2.3 Kurtosis

Kurtosis is a measure of the distribution of the samples in the sound signal.

The camera shows Kurtosis as "excess" Kurtosis, meaning that a healthy bearing will show a Kurtosis around 0. A Kurtosis of approximately 2 or above is likely to indicate that the bearing condition is getting worse.

11.3 Guidelines

Different types of bearings running at different speeds behave differently, and as such no definite guidelines can be given that will cover all types of bearings. It is thus recommended to always compare the Crest factor, Kurtosis, and SPL of a bearing to healthy bearings of the same type, measured from a similar distance.

The following measures typically indicate potential issues with bearings:

- Sound Level Pressure - very high, especially combined with a low Crest factor
- Crest factor - 6 or above
- Kurtosis - 2 or above

12 FLIR Acoustic Camera Viewer

FLIR Acoustic Camera Viewer is a cloud service for acoustic snapshots and videos. Upload snapshots and videos from your camera and your data will be instantly available on your computer and mobile devices.

With the FLIR Acoustic Camera Viewer you can perform further analysis of detected leaks, partial discharges, and mechanical faults, and also generate inspection reports.

To use the cloud service, you must create a FLIR Acoustic Camera Viewer account and pair the camera with the account.

- A FLIR Acoustic Camera Viewer account can be paired with multiple cameras.
- A camera can be paired with multiple FLIR Acoustic Camera Viewer accounts.

The settings, parameters, and comments you enter in the camera will be saved in the snapshots. This information will be visible to all users who have access to the uploaded snapshots.

12.1 Setup

You can set up the camera to upload images to the FLIR Acoustic Camera Viewer.

If automatic upload is enabled, new snapshots and videos will automatically be uploaded to the FLIR Acoustic Camera Viewer account. You can also upload files manually.

To be able to upload snapshots and videos, you must connect the camera to the internet and pair the camera with a FLIR Acoustic Camera Viewer account.

12.2 Create a FLIR Acoustic Camera Viewer account

To create a FLIR Acoustic Camera Viewer account, go to http://acousticviewer.flir.com and click *Sign in*.

12.3 Connect the camera to the internet

You can connect the camera to the internet via Wi-Fi. This can be done as part of the initial setup of the camera, or at any time via the Settings menu.

To connect to Wi-Fi via the Settings menu, do the following:

1. Tap the Settings button and then tap *Network settings*.
2. Tap *Location* and select the Wi-Fi country.
3. Tap *Enable WiFi*.
4. When Wi-Fi is enabled, tap *Select WiFi*.
5. Select one of the available networks.

Note

- If the *Location* setting is incorrect, you may not be able to connect to Wi-Fi networks or the Wi-Fi connection may not work properly.
- If the network you wish to connect to is not listed among the available networks, try moving closer to the Wi-Fi access point.
- The camera only accepts secure Wi-Fi networks that require password input. Networks that require both user name and password and public Wi-Fi networks are not supported.
- If you are using an iPhone, enable the "Maximize Compatibility" option.
- When using a hotspot connection, make sure that the SSID (network name) has no spaces. For instance, instead of ‘My Hotspot’, use ‘MyHotspot’ as network name.

12.4 Pairing

To pair the camera with the FLIR Acoustic Camera Viewer, you need the serial number of your camera and also a secret code. These details are available in the camera settings.

1. Make sure the camera is connected to the internet.
2. On the camera, tap the Settings button and then tap *Network settings* > *Device registration*. Make a note of the serial number and secret code.

   Note The secret code changes over time. Tap the *Refresh* button to make sure the current secret code is displayed.
3. Use a computer or other device with internet access and go to http://acousticviewer.flir.com. Sign in to your FLIR Acoustic Camera Viewer account.
4. On the website, enter the serial number and the secret code.

12.5 Automatic upload

You can set up the camera to automatically upload snapshots and videos to your FLIR Acoustic Camera Viewer account.

Note Snapshots and videos are automatically removed from the camera, after they have been uploaded to the FLIR Acoustic Camera Viewer cloud service.

To enable automatic upload, do the following:

1. Make sure the camera is paired with your FLIR Acoustic Camera Viewer account.
2. Tap the Archive button.
3. Tap the Upload button.
4. Tap to select *Upload to cloud* = *On*.

12.6 Manual upload

You can manually upload files from the archive when the camera is connected to the internet and is paired with a FLIR Acoustic Camera Viewer account.

Note Snapshots and videos are automatically removed from the camera, after they have been uploaded to the FLIR Acoustic Camera Viewer.

To upload, do the following:

1. Make sure the camera is connected to the internet
2. Make sure the camera is paired with your FLIR Acoustic Camera Viewer account.
3. Tap the Archive button.
4. Tap the Upload button.
5. Tap *Upload to cloud now*.
6. To return to the live view, tap the Exit button at the left of the screen.

12.7 Access the FLIR Acoustic Camera Viewer

You can access the FLIR Acoustic Camera Viewer from a browser on your computer or mobile device.

To access the FLIR Acoustic Camera Viewer, go to http://acousticviewer.flir.com.

12.8 Import files

If you have exported snapshots and videos to a USB memory stick, you can import the files (.nlz) to the FLIR Acoustic Camera Viewer.

Note Before importing the files, ensure that the camera used for capturing the snapshots and videos is paired with your FLIR Acoustic Camera Viewer account.

13 FLIR Thermal Studio

FLIR Thermal Studio is a powerful, flexible, and efficient Windows desktop software for advanced image post-processing and reporting. The software supports images and videos from all modern FLIR thermography cameras, as well as snapshots and videos from the FLIR acoustic imaging cameras.

You can open files (.nlz) that you have uploaded to the FLIR Acoustic Camera Viewer or exported to a USB memory stick in FLIR Thermal Studio.

In FLIR Thermal Studio, you can view and analyze your snapshots and videos. The application specific analysis results are displayed and you can change the settings.

For reporting, you can use one of the predefined acoustic reporting templates or create your own custom templates.

For more information, refer to the FLIR Thermal Studio user manual.

14 Camera settings

To open the Settings menu, tap the Settings button.

The Settings menu includes the following, depending on the camera model:

- Network settings
- Change mode
- Time settings
- Leak mode settings
- Power mode settings
- Advanced settings
- Device info

14.1 Network settings

Enable and disable Wi-Fi.

Connect the camera to a Wi-Fi network. For more information, see section 12.3 *Connect the camera to the internet*.

Pair the camera with the FLIR Acoustic Camera Viewer. For more information, see section 12.4 *Pairing*.

When the camera is connected to Wi-Fi, the IP address and SSID of the network is displayed.

14.2 Change mode

The camera supports the following application modes, depending on the camera model:

- Leak mode
- Partial discharge mode
- Mechanical mode

To change the application mode, do the following:

1. On the Settings menu, tap *Change mode*.
2. The selected mode is displayed. Tap *Change* to cycle through the mode options: LD (Leak detection), PD (Partial discharge), Mechanical.
3. To exit, tap the Exit button at the left of the screen.

Note You can also change the application mode on the Quick menu.

Show on startup check box:

- Checked box: The *Change mode* dialog is be displayed when the camera starts, allowing the user to select their preferred mode.
- Unchecked box: When the camera is powered off, the currently selected mode is saved and will be applied the next time the camera is powered on.

14.3 Time settings

The current time and date is displayed here.

Select the time zone to be used in the camera. The time and date is automatically synchronized when the camera is connected to Wi-Fi.

14.4 Leak mode settings

Settings required for accurate analysis results in Leak detection mode. For more information, see section 9.3 *Leak analysis parameters*.

14.5 Power mode settings

- *Environmental temperature*: The temperature of the air can affect how sound waves propagate through the air. To obtain more accurate results, it is recommended to specify the environmental temperature.
- *Relative humidity*: The propagation of sound is affected by the relative humidity of the environment. To obtain more accurate results, it is recommended to specify the relative humidity.

14.6 Advanced settings

- *Calibration mode*: This function is used together with the FLIR Acoustic Camera Tester to check the accuracy of the camera. For more information, refer to the FLIR Acoustic Camera Tester user manual.
- *Reset settings*: Resets all settings to factory defaults. There is no impact on saved snapshots and videos in the camera, and no impact on paired FLIR Acoustic Camera Viewer accounts.
- *Remove all data*: Removes all user data and resets all settings to factory defaults. All snapshots and videos will be removed from the camera. All FLIR Acoustic Camera Viewer accounts will be unpaired.
- *Language*: Select the language to be used in the camera.
- *Filter mode*: This setting impacts the filter functionality in the Leak and Partial discharge modes. (Auto filter is not available in Mechanical mode.)
  - *Auto*: The Auto filter is used. The Filter button is not available on the screen.
  - *Manual*: The Filter button is enabled and can be used to cycle through the filter options.
- *Available filters*: Used to enable/disable the Full filter, intended for experienced users. See also section 8.2 *Filters*.
  - *Optimal*: Disables the Full filter.
  - *All*: Enables the Full filter.
- *Distance unit*: Select the distance unit to be used in the camera.

14.7 Device info

The device information is displayed at the bottom of the Settings menu:

- Serial number
- Software version
- Hardware version

To display the e-label, tap the *Device info* field. For more information, see section 5.4 *E-label*.

15 Maintenance and cleaning

15.1 Clean the camera

CAUTION

If you do not obey these Cautions, damage to the equipment can occur.

- Do not use strong cleaning solutions.
- Do not expose the equipment to running or dripping water or liquid.
- Do not apply direct and/or highly compressed air to the microphones.

15.1.1 Camera chassis and screen

To clean the camera chassis and screen, do the following:

1. Power off the camera.
2. Dampen a cloth with water or mild soapy water.
3. Squeeze the cloth to remove excess water.

15.1.2 Microphone array

User cleaning of the microphone array is not recommended, as it may cause damage. Contact your distributor for assistance.

Note FLIR assumes no responsibility for any damage caused by user attempts to clean the microphone array.

If you decide to clean the microphone array yourself, use indirect and low pressure air from a distance to blow particles away from the conical holes of the microphones.

15.1.3 Battery and charger

To clean the battery and charger, use a dry cleaning cloth only.

15.2 Storage

Store the equipment in a dry location at room temperature.

Store the batteries fully charged and recharge them once every three months.

Start up the camera at least once every three months.

15.3 Calibration

The camera undergoes calibration during production. No further re-calibration is necessary.

The FLIR Acoustic Camera Tester can be used to check the accuracy of the camera. For more information, refer to the FLIR Acoustic Camera Tester user manual.

16 Updating the camera

To take advantage of our latest camera software, it is important that you keep your camera updated.

The camera can be updated using one of the following methods:

- Over-The-Air (OTA): When connected to the internet, the camera will automatically download software updates available in the FLIR Acoustic Camera Viewer. When an update has been downloaded, it will be applied the next time the camera starts.
- Download an update package and update the camera via a USB memory stick.

The current software version is displayed in the camera settings, at the bottom of the Settings menu.

16.1 Update the camera Over-The-Air (OTA)

1. Make sure the camera battery is fully charged.
2. Power on the camera.
3. Connect the camera to a stable Wi-Fi network. See section 12.3 *Connect the camera to the internet*.
4. Make sure the camera is paired with a FLIR Acoustic Camera Viewer account. See section 12.4 *Pairing*.
5. If an update is available in the FLIR Acoustic Camera Viewer, the camera will automatically download the new software.
6. During the download, a progress bar is displayed at the bottom of the Settings menu.
7. When the download is completed, restart the camera to apply the update; power off and then power on the camera.

16.2 Update the camera via USB memory stick

1. Go to https://support.flir.com. Find the software download area and search for FLIR Si2 software.
2. Download the update package.
3. Put the update file in the root folder of the USB memory stick. Make sure there are no other .nlz files in the root folder.
4. Power on the camera. Wait until the camera has started.
5. Open the USB port cover at the top of the camera.
6. Insert the USB stick.
7. Follow the instructions on the camera screen.

   Note Do not remove the USB memory stick while the update is being copied.

8. When the download is completed, remove the USB memory stick and put the USB port cover back in place.
9. Restart the camera; power off and then power on the camera.
10. To complete the update process, restart the camera again.
11. The camera will finalize the update. When the live view is displayed, the camera is ready for normal operation.

17 Disposal of electronic waste

Waste of Electrical and Electronic Equipment (WEEE) poses a risk to human health and the environment when not disposed of properly. This product should not be discarded as unsorted waste but must be sent to separate collection facilities for recovery and recycling. More information is available from the relevant local authority.

17.1 Battery removal

Before disposal of the camera, remove the battery.

To remove the battery, do the following:

1. Push the ends of the battery cover. Then lift the cover off the camera.

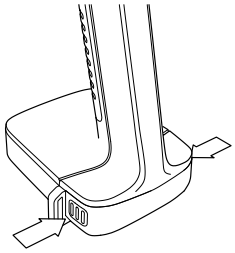

2. Pull the battery out of the camera.

Before you discard the battery, apply insulation to the terminals with adhesive tape or equivalent materials.

18 Disclaimers

18.1 Legal disclaimer

Terms of use is available in the user interface of the product.

For warranty terms, refer to https://www.flir.com/warranty.

18.2 Export controls

Products described herein may be subject to export regulations.

This document does not contain export-controlled information.

18.3 Patents

This product is protected by patents, design patents, patents pending, or design patents pending.

18.4 Quality assurance

The Quality Management System under which these products are developed and manufactured has been certified in accordance with the ISO 9001 standard.

FLIR Systems is committed to a policy of continuous development; therefore we reserve the right to make changes and improvements on any of the products without prior notice.

18.5 Third-party licenses

Information about third-party licenses is available in the user interface of the product.

18.6 Usage statistics

FLIR Systems reserves the right to gather anonymous usage statistics to help maintain and improve the quality of our software and services.

18.7 Copyright

© 2024 FLIR Systems, Inc. All rights reserved worldwide. No parts of the software including source code may be reproduced, transmitted, transcribed or translated into any language or computer language in any form or by any means, electronic, magnetic, optical, manual or otherwise, without the prior written permission of FLIR Systems.

The documentation must not, in whole or part, be copied, photocopied, reproduced, translated or transmitted to any electronic medium or machine readable form without prior consent, in writing, from FLIR Systems.

Names and marks appearing on the products herein are either registered trademarks or trademarks of FLIR Systems and/or its subsidiaries. All other trademarks, trade names or company names referenced herein are used for identification only and are the property of their respective owners.

Website
http://www.flir.com

Customer support
http://support.flir.com

Copyright
© 2024, FLIR Systems, Inc. All rights reserved worldwide.

Disclaimer
Specifications subject to change without further notice. Models and accessories subject to regional market considerations. License procedures may apply. Products described herein may be subject to US Export Regulations. Please refer to exportquestions@flir.com with any questions.

Publ. No.: T810637
Release: AD
Commit: 96533
Head: 96533
Language: en-US
Modified: 2024-03-11
Formatted: 2024-03-11